RSKR

Single Nut, Cylindrical with Thread.

Tolerance D: h10.

Standard nuts are without any seals or scrapers. Other types on request.

All dimensions in mm.

Material: Ball screw: S55C (according to standard JIS G4051) / Ball nut: SCM415H (according to standard JIS G4053)



Every care has been taken to ensure the accuracy of the information in this document, but we take no liability for any errors or omissions. We reserve the right to make changes without prior notice.

General Data

Designation	Compatible with	Dynamic Load Ratings Ca (N)	Static Load Ratings C0a (N)	Ball diameter	Turns x circuits
RSKR082.5	FKN06	2109	2345	1.2	1 x 2.5
RSKR1204	BKN08 / FKN08 / BFN08	6327	6798	2.381	1 x 3.5
RSKR1605	BKN12 / FKN12 / BFN12 / FFN12	10291	11223	3.175	1 x 3.5

Dimensions

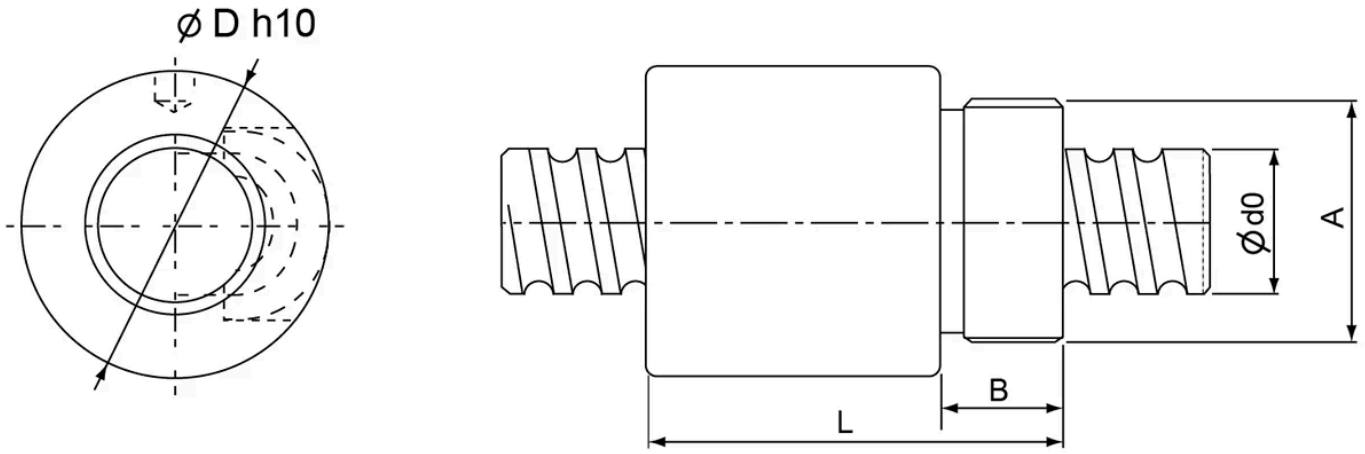

Designation	A	B	D	L	d0 x Lead
RSKR082.5	M15 x 1	7.5	17.5	26	8 x 2.5
RSKR1204	M20 x 1	10	25.5	34	12 x 4
RSKR1605	M26 x 1.5	12	32.5	42	16 x 5

Every care has been taken to ensure the accuracy of the information in this document, but we take no liability for any errors or omissions. We reserve the right to make changes without prior notice.