FSER

Single Nut with Flange, Long Lead.

Standard nuts are with oil-seals. Other types on request.

All dimensions in mm.

Material: Ball screw: S55C (according to standard JIS G4051) / Ball nut: SCM415H (according to standard JIS G4053)



Every care has been taken to ensure the accuracy of the information in this document, but we take no liability for any errors or omissions. We reserve the right to make changes without prior notice.

General Data

Designation	Compatible with	Dynamic Load Ratings Ca (N)	Static Load Ratings C0a (N)	Ball diameter	Turns x circuits
FSER1616	BKN12 / FKN12 / BFN12 / FFN12	14833	19571	3.175	1.8 x 2
FSER2020	BKN15 / FKN15 / BFN15 / FFN15	16275	24172	3.175	1.8 x 2
FSER2525	BKN20 / FKN20 / BFN20 / FFN20	24339	37778	3.969	1.8 x 2
FSER3232	BKN25 / FKN25 / WBK25DF / BFN25 / FFN25	35169	59557	4.762	1.8 x 2
FSER4040	BKN30 / FKN30 / WBK30DF / WBK30DFF / BFN30 / FFN30	56682	115297	6.35	1.8 x 2
FSER5050	BKN40 / WBK40DF / WBK40DFF / BFN40	86514	188754	7.938	1.8 x 2

Dimensions

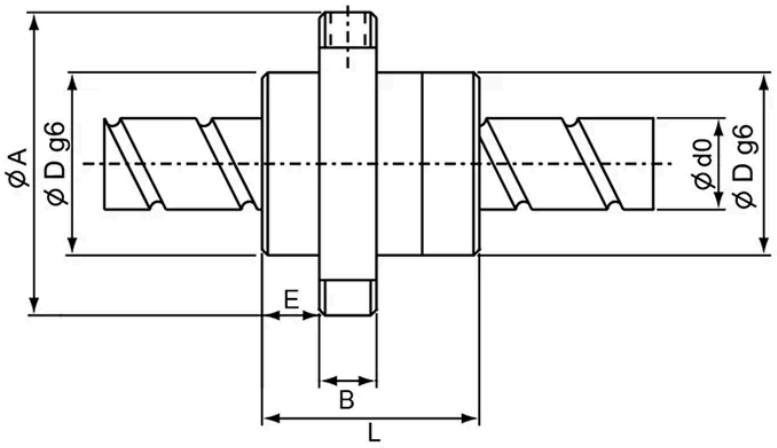

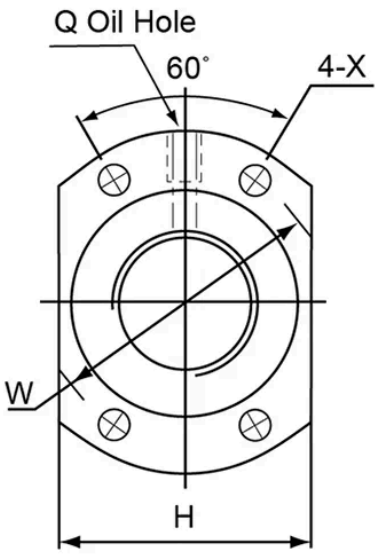

Designation	A	B	D	E	H	L	Q	W	X
FSER1616	53	10	32	10.5	38	48	M6	42	4.5
FSER2020	62	10	39	10.8	46	55	M6	50	5.5
FSER2525	74	12	47	11.2	56	67	M6	60	6.6
FSER3232	92	15	58	14	68	82	M6	74	9
FSER4040	114	17	73	17	84	100	M6	93	11
FSER5050	135	20	90	21.5	92	125	M6	112	14

Designation	d0 x Lead
FSER1616	16 x 16
FSER2020	20 x 20
FSER2525	25 x 25
FSER3232	32 x 32
FSER4040	40 x 40
FSER5050	50 x 50

Every care has been taken to ensure the accuracy of the information in this document, but we take no liability for any errors or omissions. We reserve the right to make changes without prior notice.