Optional L-type adapter

When external NBR seal is chosen (SN), please use long L-type adapter.



Every care has been taken to ensure the accuracy of the information in this document, but we take no liability for any errors or omissions. We reserve the right to make changes without prior notice.

OB-M3-M6

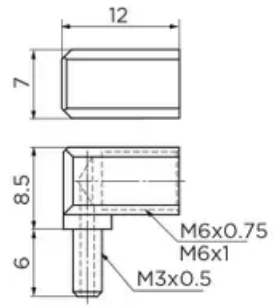

OB-M6-M8

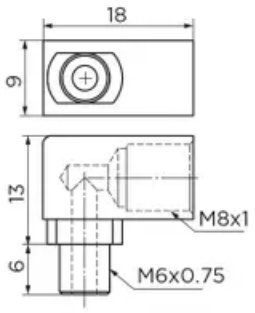

Ø 4 Oil hole grease injector available

OB-M6-M8-L

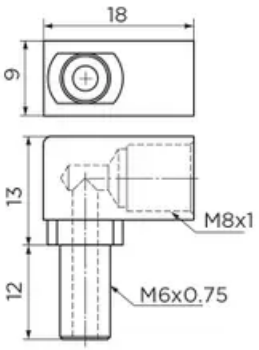

Ø 4 Oil hole grease injector available

OB-M6-PT1/8

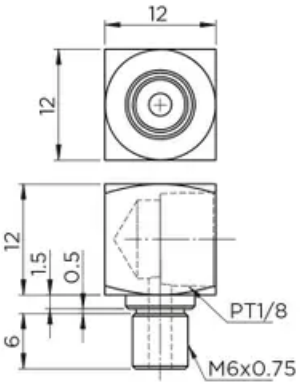

OB-M6-PT1/8- L

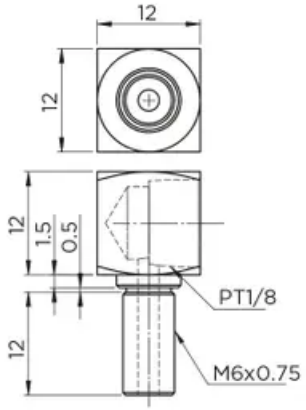

OB-PT1/8-M8

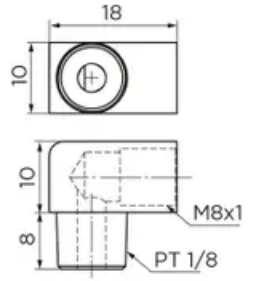

Ø 4 Oil hole grease injector available

Every care has been taken to ensure the accuracy of the information in this document, but we take no liability for any errors or omissions. We reserve the right to make changes without prior notice.

OB-PT1/8-PT1/8

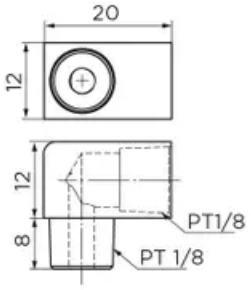

Port sizes for grease nipple

Type	Port size		Top o-ring size
	Front	Side	
HRC/ARC 15	M3	M3	P3
HRC/ARC 20	M3	M3	P4
HRC/ARC/ERC 25	M6	M3	P4
HRC/ARC 30	M6	M6	P5
HRC/ARC 35	M6	M6	P5
HRC/ARC 45	PT1/8	M6	P5
HRC/ARC 55	M6	M6	P5
WRC 21/15	M3	M3	P3
WRC 27/20	M3	M3	P4

General Data

Designation	Compatible with	Remark	Thread	Type
OB-M3-M6	Block size 15 & 20	-	M3x0.5	Normal
OB-M6-M8	Block size 25, 30, 35 & 55	-	M6x0.75	Normal
OB-M6-M8-L	Block size 25, 30, 35 & 55	For block with external seal (SN)	M6x0.75	Long
OB-M6-PT1/8	Block size 30, 35 & 55	-	M6x0.75	Normal
OB-M6-PT1/8- L	Block size 30, 35 & 55	For block with external seal (SN)	M6x0.75	Long
OB-PT1/8-M8	Block size 45	-	PT 1/8	Normal
OB-PT1/8-PT1/8	Block size 45	-	PT 1/8	Normal

Every care has been taken to ensure the accuracy of the information in this document, but we take no liability for any errors or omissions. We reserve the right to make changes without prior notice.