Narrow Block Type GNS

This light-weight narrow runner block corresponds to the structure of the flanged runner block from the previous page. It's only slimmer and designed for mounting from above. The mounting dimensions are also identical to the steel guiding rails and in accordance to DIN 645-1. In this way you can easily change the installed constructions.



Note!
Determination of the dynamic load capacities and torques is based on a travel life of 100.000 m. Due to the mechanical operations of guide rails and runner block with their different materials, is not possible to clearly indicate a static load rating. In this case never exceed Max permissible load or Static moment Mr0. Otherwise malfunction or damage may occur.

See technical information regarding Lube units.

Dimensions in mm.

Lead times in the table below are only indications. Choice of options will affect lead time. Please contact us for exact delivery time for your request.

Every care has been taken to ensure the accuracy of the information in this document, but we take no liability for any errors or omissions. We reserve the right to make changes without prior notice.

General Data

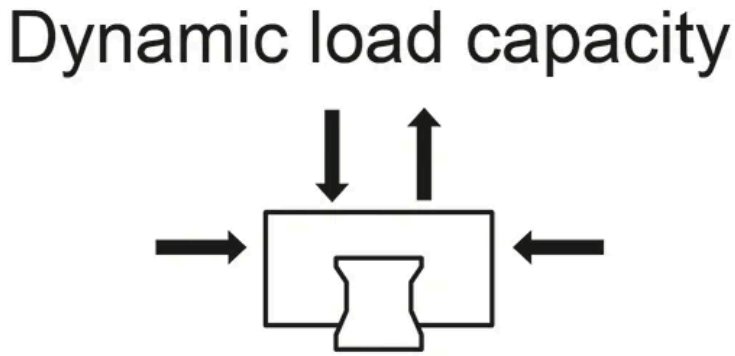

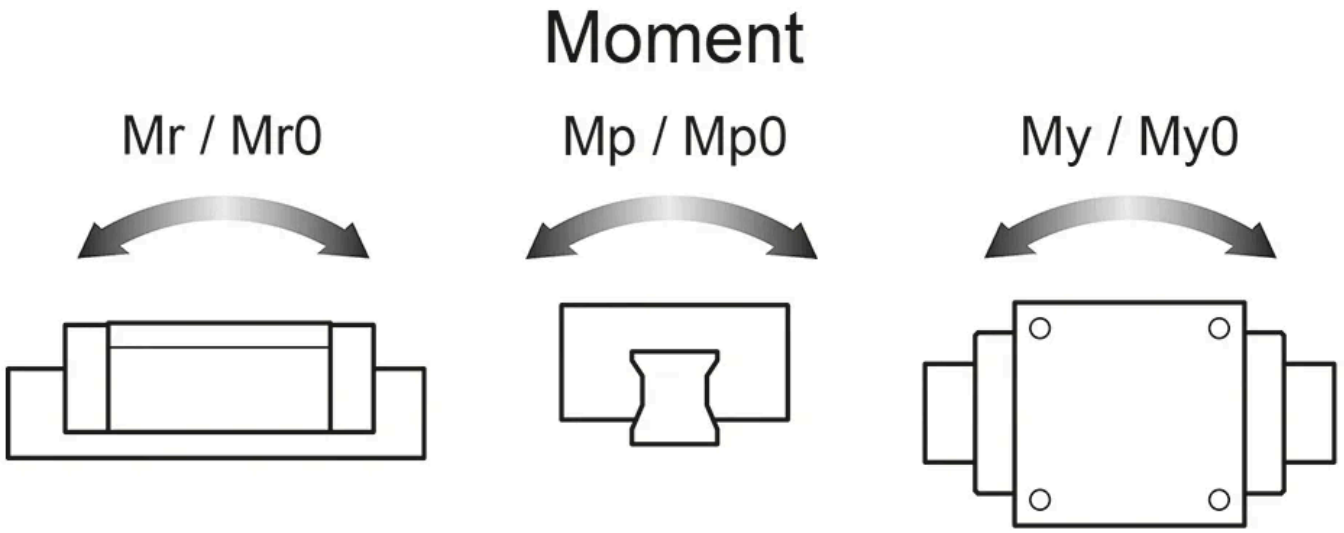

Designation	Dynamic Load Capacity C (N)	Static Moment Mr0 (Nm)	Static Moment Mp0 (Nm)	Static Moment My0 (Nm)	Dynamic Moment Mr (Nm)
GNS15	5000	14	12	12	36
GNS20	11000	40	35	35	101
GNS25	16000	66	59	59	165

Designation	Dynamic Moment Mp (Nm)	Dynamic Moment My (Nm)	Weight Block (kg)	Max. Permissible Load Fmax (N)
GNS15	29	29	0.07	2000
GNS20	89	89	0.15	4400
GNS25	147	147	0.22	6400

Every care has been taken to ensure the accuracy of the information in this document, but we take no liability for any errors or omissions. We reserve the right to make changes without prior notice.

Dimensions

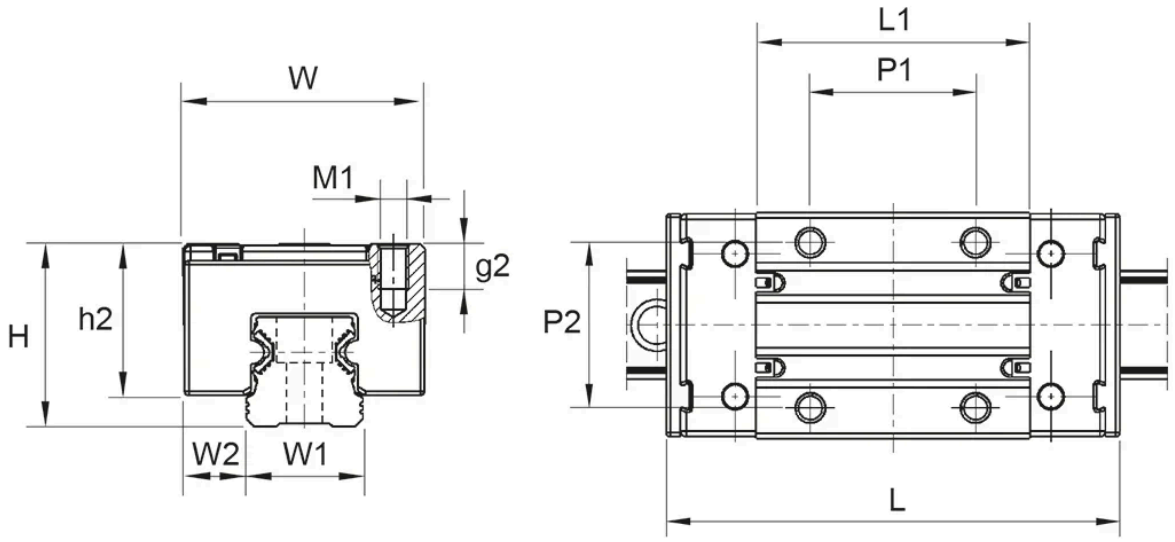

Designation	L	H	W	L1	h2	W1	W2	T	M1
GNS15	64	24	34	37.8	19.8	15	9.5	-	M4
GNS20	85.9	30	44	51.5	24.7	20	12	7.5	M5
GNS25	96	36	48	58	29.9	23	12.5	9	M6

Designation	g2	P1	P2
GNS15	6	26	26
GNS20	-	36	32
GNS25	-	35	35

Every care has been taken to ensure the accuracy of the information in this document, but we take no liability for any errors or omissions. We reserve the right to make changes without prior notice.