K-Rail



The compensation rails are used for the load carrier of radial and axial forces. Tolerance compensation in two planes in combination with the U-rail. A combination of compensating rail and floating rail (K+U system) manages both parallel deviations and angular errors. The unique raceway contour of the K-rail allows the slider a certain rotation around its longitudinal axis, with the same linear precision as with a T-rail. The K-rail must be mounted in such way that the radial load of the slider is always supported by at least 2 rollers on the slider, which lie on the V-shaped raceway of the rail.

The rails are available in 2 different sizes: 43, 63 mm.

Longer single rails up to max. 4080 mm on request. For longer rail systems, see section ”Joined rails” in Technical Information.

Dimensions in mm.

D1 Fixing holes for Torx® screws with low head (custom design) included in scope of supply.
D2 Fixing holes for countersunk head screws according to DIN 7991.

Material: Cf53. Zinc-plated according to ISO 2081. Rail raceways are induction hardened and ground.
Max. Acceleration (m/s²): 20 (depending on application)
Max. Operating Speed (m/s): 9 (depending on application)
Max. Radial Load Capacity (N): 15,000 (per slider)
Temperature range (°C): -20 to +120

Every care has been taken to ensure the accuracy of the information in this document, but we take no liability for any errors or omissions. We reserve the right to make changes without prior notice.

General Data

Designation	Size
KLC43	43
KLV43	43
KLC63	63
KLV63	63

Dimensions

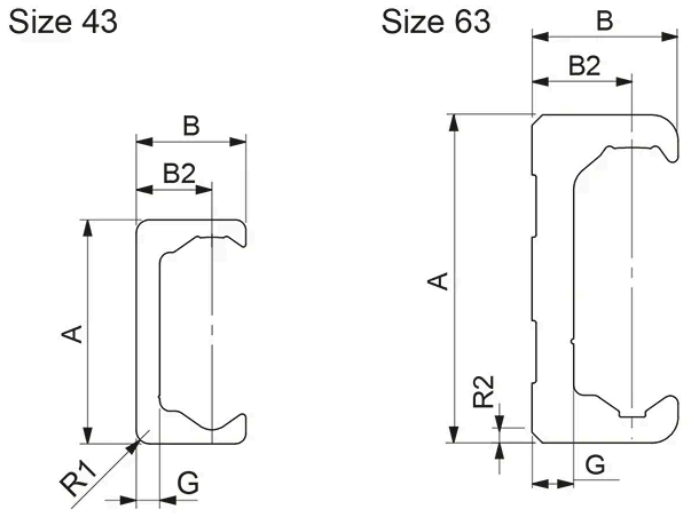

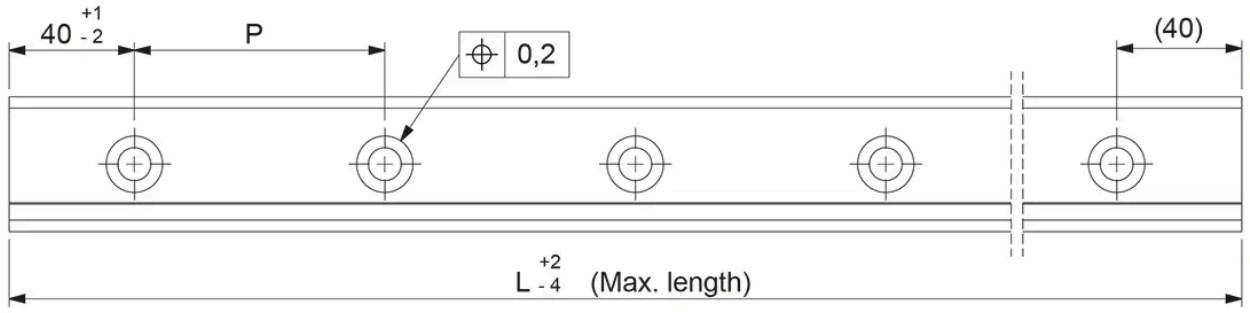

Every care has been taken to ensure the accuracy of the information in this document, but we take no liability for any errors or omissions. We reserve the right to make changes without prior notice.

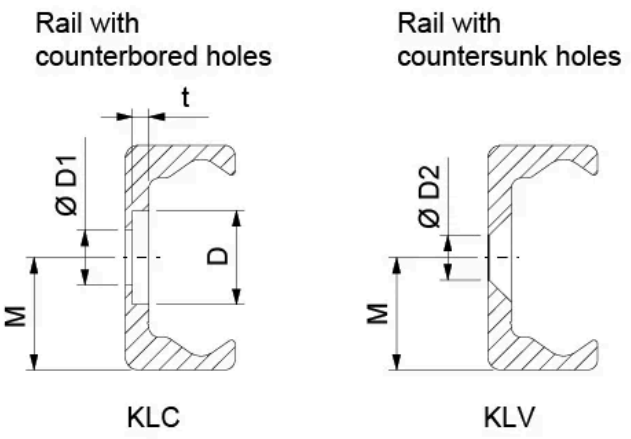

Designation	M	A	B	B2	R1	R2	L	D	D1
KLC43	21.5	43	21	14.5	2.5	-	4080	18	M8
KLV43	21.5	43	21	14.5	2.5	-	4080	18	M8
KLC63	31.5	63	28	19.25	-	2x45°	3600	15	M8
KLV63	31.5	63	28	19.25	-	2x45°	4080	15	M8

Designation	D2	t	G	P	Min. length
KLC43	M8	3.1	4.5	80	400
KLV43	M8	3.1	4.5	80	400
KLC63	M10	5.2	8	80	560
KLV63	M10	5.2	8	80	560

Load & Weight

Designation	Weight Rail (kg/m)
KLC43	2.6
KLV43	2.6
KLC63	6.0
KLV63	6.0

Every care has been taken to ensure the accuracy of the information in this document, but we take no liability for any errors or omissions. We reserve the right to make changes without prior notice.

Rail/Slider Combination

K-rail with NSA slider

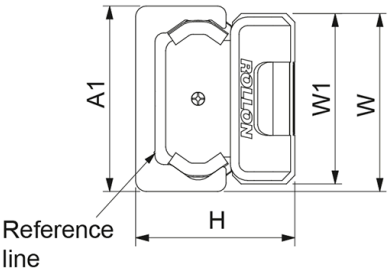

K-rail with NSDA slider

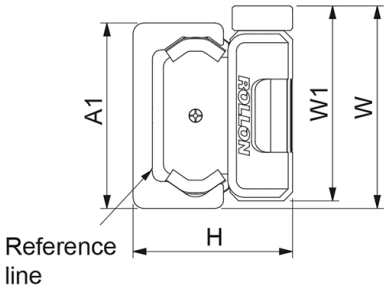

K-rail with CSWK-slider

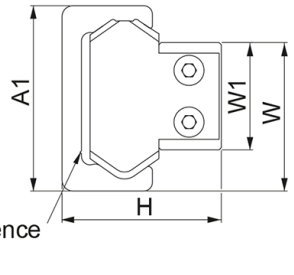

The K-rail enables the slider to twist around its longitudinal axis.

Designation	A1	H (Rail+NSW/NSA)	H (Rail+NSD/NSDA)	H (Rail+CSW/CSWK)	W1 (Rail+NSW/NSA)
KLC43	43 (+0.35/-0.10)	37 (±0.15)	37 (±0.15)	37 (±0.15)	39.5 (0/-0.2)
KLV43	43 (+0.35/-0.10)	37 (±0.15)	37 (±0.15)	37 (±0.15)	39.5 (0/-0.2)
KLC63	63 (+0.35/-0.10)	50.5 (±0.15)	n/a	49.8 (±0.15)	60 (0/-0.2)
KLV63	63 (+0.35/-0.10)	50.5 (±0.15)	n/a	49.8 (±0.15)	60 (0/-0.2)

Designation	W1 (Rail+NSD/NSDA)	W1 (Rail+CSW/CSWK)	W (Rail+NSW/NSA)	W (Rail+NSD/NSDA)	W (Rail+CSW/CSWK)
KLC43	39.5 (0/-0.2)	24.9 (0/-0.15)	41.25 (+0.2/-0.4)	41.25 (+0.2/-0.4)	34.3 (+0.10/-0.30)
KLV43	39.5 (0/-0.2)	24.9 (0/-0.15)	41.25 (+0.2/-0.4)	41.25 (+0.2/-0.4)	34.3 (+0.10/-0.30)
KLC63	n/a	39.5 (+0.15/0)	61.5 (+0.2/-0.4)	n/a	51.6 (+0.15/-0.30)
KLV63	n/a	39.5 (+0.15/0)	61.5 (+0.2/-0.4)	n/a	51.6 (+0.15/-0.30)

Every care has been taken to ensure the accuracy of the information in this document, but we take no liability for any errors or omissions. We reserve the right to make changes without prior notice.