SFE---.5200

Heavy duty guideway unit axial bearing with 40 % higher load capacity
Excentric bearing adjustable to minimize clearance.
Lubricated for lifetime.
Special dimensions on request.

Dimensions in mm.

Sizes Available: 60; 70; 80; 90; 110; 120; 150



Every care has been taken to ensure the accuracy of the information in this document, but we take no liability for any errors or omissions. We reserve the right to make changes without prior notice.



General Data

FA = System Load Capacity Axial
FR = System Load Capacity Radial
Ca = Dynamic Load Capacity Axial
C = Dynamic Load Capacity Radial

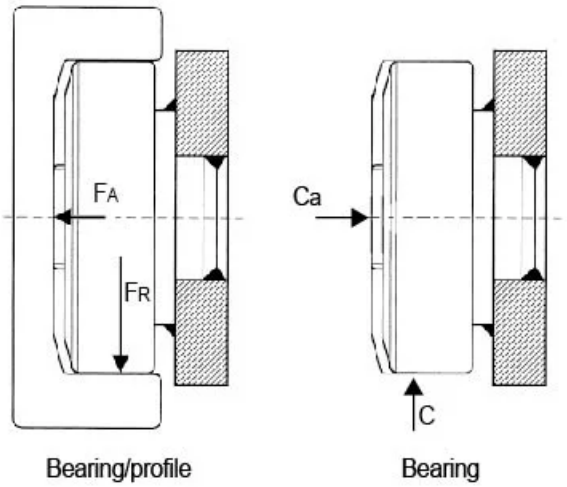

Designation	System Load Capacity Radial (N)	System Load Capacity Axial (N)
SFE060.5200	8870	7000
SFE070.5200	11400	11000
SFE080.5200	12870	11000
SFE090.5200	20370	13000
SFE110.5200	24060	20000
SFE120.5200	33440	20000
SFE150.5200	51940	20000

Every care has been taken to ensure the accuracy of the information in this document, but we take no liability for any errors or omissions. We reserve the right to make changes without prior notice.

Dimensions

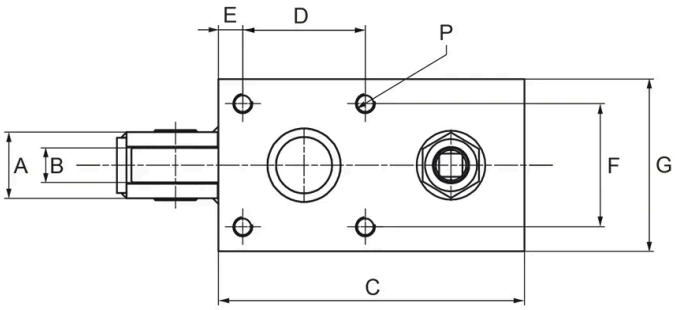

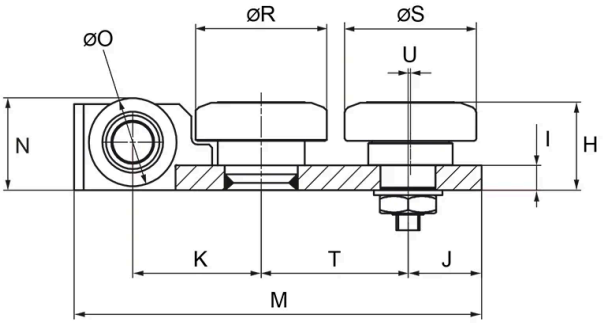

Designation	A	B	C	D	E	F	G	H	I
SFE060.5200	38	20	140	50	10	50	70	41.5	12
SFE070.5200	42	24	160	60	10	60	80	49	15
SFE080.5200	46	24	180	70	15	70	100	48.5	15
SFE090.5200	45	24	210	90	15	90	120	61	20
SFE110.5200	54	28	250	100	20	100	140	71.5	20
SFE120.5200	54	28	280	100	20	100	140	71.5	20
SFE150.5200	54	28	325	120	20	120	160	79	25

Designation	J	K	M	N	O	P	R	S	T	U
SFE060.5200	35	55	188	42.5	40	4xM10	62.5	62.7	70	2
SFE070.5200	40	65	217	51	47	4xM12	70.1	70.1	80	2
SFE080.5200	45	75	237	51.5	47	4xM12	77.7	77.7	85	2
SFE090.5200	50	85	273	64	52	4xM16	88.4	88.4	100	2
SFE110.5200	60	105	333	75	72	4xM16	107.1	107.7	120	2
SFE120.5200	70	107	365	76	72	4xM16	123	123	140	2
SFE150.5200	80	80	-	83.5	72	4xM16	149	149	165	3

Every care has been taken to ensure the accuracy of the information in this document, but we take no liability for any errors or omissions. We reserve the right to make changes without prior notice.