LMEK...UU

Dimensions in mm.
Other types available on request.

Material: 100Cr6



Every care has been taken to ensure the accuracy of the information in this document, but we take no liability for any errors or omissions. We reserve the right to make changes without prior notice.

General Data

Designation	Dynamic Load Capacity (N)	Static Load Capacity (N)	Number Of Ball Rows
LMEK8UU	270	410	4
LMEK12UU	520	790	4
LMEK16UU	590	910	5
LMEK20UU	880	1400	5
LMEK25UU	1000	1600	6
LMEK30UU	1600	2800	6
LMEK40UU	2200	4100	6
LMEK50UU	3900	8100	6
LMEK60UU	4800	10000	6

Dimensions

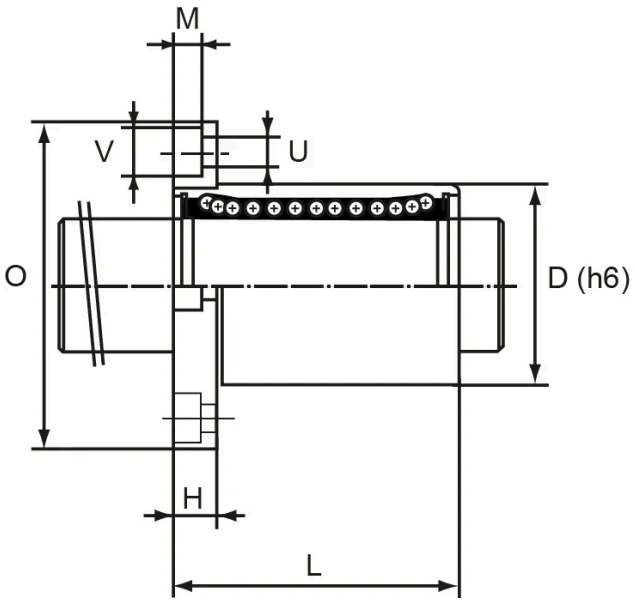

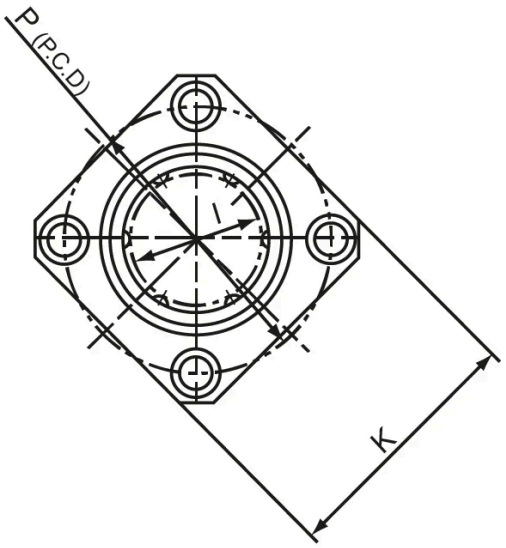

Designation	I	D	L	O	H	K	M	P	U
LMEK8UU	8	16	25	32	5	25	3.1	24	3.5
LMEK12UU	12	22	32	42	6	32	4.4	32	4.5
LMEK16UU	16	26	36	46	6	35	4.4	36	4.5
LMEK20UU	20	32	45	54	8	42	5.4	43	5.5
LMEK25UU	25	40	58	62	8	50	5.4	51	5.5
LMEK30UU	30	47	68	76	10	60	6.5	62	6.6
LMEK40UU	40	62	80	98	13	75	8	80	9
LMEK50UU	50	75	100	112	13	88	8.1	94	9
LMEK60UU	60	90	125	134	18	106	10.8	112	11

Designation	V
LMEK8UU	6
LMEK12UU	7.5
LMEK16UU	7.5
LMEK20UU	9

Every care has been taken to ensure the accuracy of the information in this document, but we take no liability for any errors or omissions. We reserve the right to make changes without prior notice.

Designation	V
LMEK25UU	9
LMEK30UU	11
LMEK40UU	14
LMEK50UU	14
LMEK60UU	17.5

Every care has been taken to ensure the accuracy of the information in this document, but we take no liability for any errors or omissions. We reserve the right to make changes without prior notice.