SHF

Material: Aluminium



Every care has been taken to ensure the accuracy of the information in this document, but we take no liability for any errors or omissions. We reserve the right to make changes without prior notice.

General Data

Designation	Weight (kg)
SHF12	0.02
SHF16	0.027
SHF20	0.04
SHF25	0.06
SHF30	0.11
SHF40	0.51

Dimensions

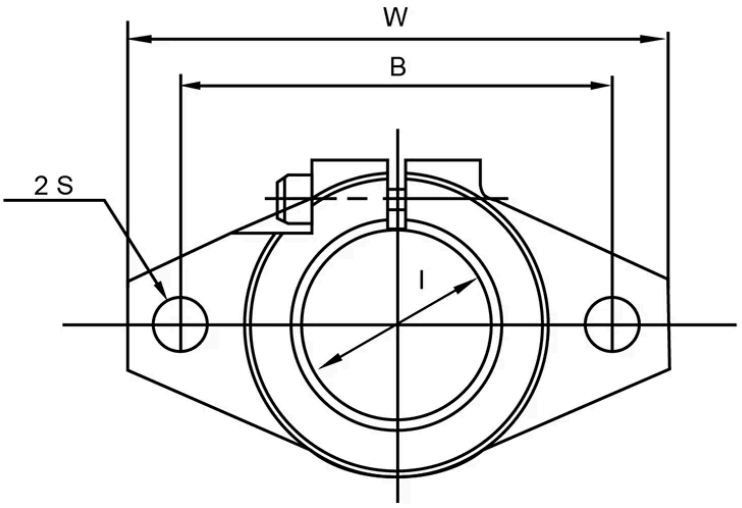

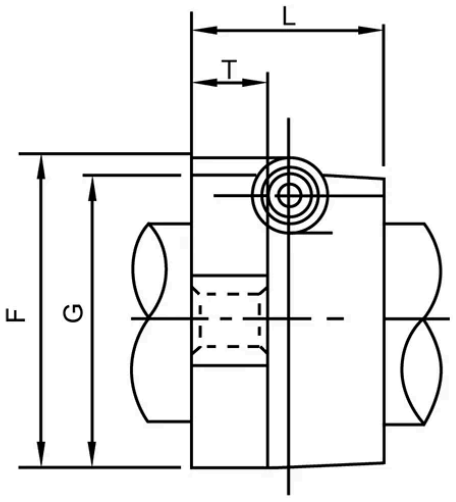

Designation	I	L	W	B	F	G	S	T
SHF12	12	13	47	36	28	25	5.5	7
SHF16	16	16	50	40	31	28	5.5	8
SHF20	20	20	60	48	37	34	7	8
SHF25	25	25	70	56	42	40	7	10
SHF30	30	30	80	64	50	46	9	12
SHF40	40	40	102	80	67	56	12	16

Every care has been taken to ensure the accuracy of the information in this document, but we take no liability for any errors or omissions. We reserve the right to make changes without prior notice.