Motor adapters MTJ / MTJZ / MRJ

Motor adapters for Linear Units MTJ, MTJZ and MRJ.
Mounting screws are included!

Please note that coupling must be ordered separately.

Note: This is an dummy item. The motor flange will be designed after receipt of order and drawing (.stp file) of requested motor type. The geometry of motor flange can be changed in order to adapt it to a requested motor type.

Dimensions in mm.

For order information, see Order Codes.



Every care has been taken to ensure the accuracy of the information in this document, but we take no liability for any errors or omissions. We reserve the right to make changes without prior notice.

General Data

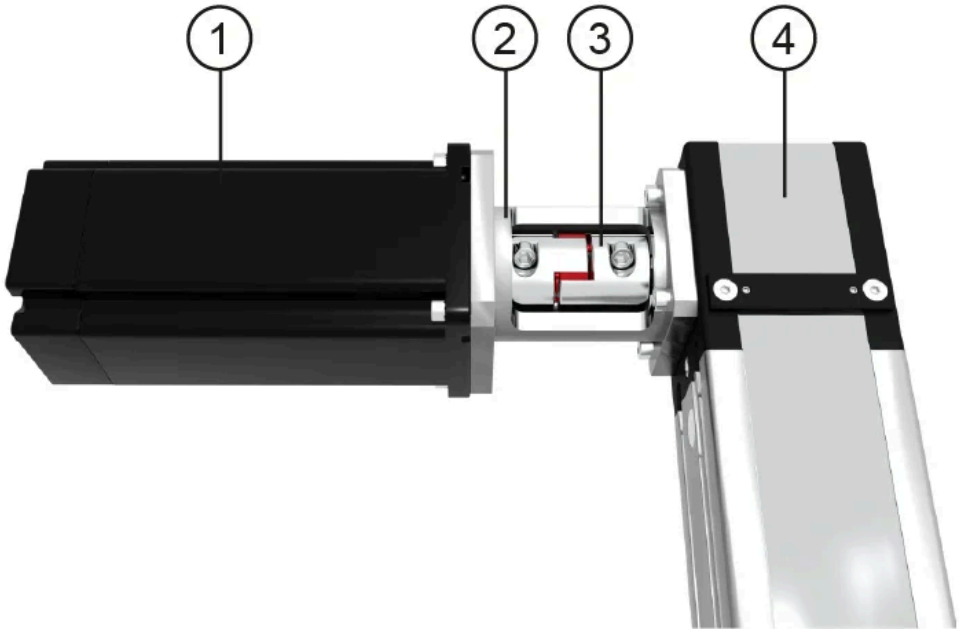

1. Motor
2. Motor adapter
3. Coupling
4. Linear Unit

Designation	Description	Compatible with	Motor Type Flange	Coupling
VK - 38x38 - 65490	VK MTJ40 38 x 38 GESM14	MTJ40, MTJZ40, MRJ40	38 x 38	GESM14
VK - 40 - 65502	VK MTJ40 40 GESM14	MTJ40, MTJZ40, MRJ40	Ø 40	GESM14
VK - 40x40 - 65458	VK MTJ40 40 x 40 GESM9	MTJ40, MTJZ40, MRJ40	40 x 40	GESM9
VK - 50 - 65543	VK MTJ40 50 GESM14	MTJ40, MTJZ40, MRJ40	Ø 50	GESM14
VK - 55 - 65546	VK MTJ40 55 GESM14	MTJ40, MTJZ40, MRJ40	Ø 55	GESM14
VK - 56x56 - 65552	VK MTJ40 56 x 56 GESM14	MTJ40, MTJZ40, MRJ40	56 x 56	GESM14
VK - 60 - 65553	VK MTJ40 60 GESM14	MTJ40, MTJZ40, MRJ40	Ø 60	GESM14
VK - 60x60 - 65555	VK MTJ40 60 x 60 GESM14	MTJ40, MTJZ40, MRJ40	60 x 60	GESM14
VK - 65 - 65558	VK MTJ40 65 GESM14	MTJ40, MTJZ40, MRJ40	Ø 65	GESM14
VK - 70 - 65562	VK MTJ40 70 GESM14	MTJ40, MTJZ40, MRJ40	Ø 70	GESM14
VK - 72x72 - 65563	VK MTJ40 72 x 72 GESM14	MTJ40, MTJZ40, MRJ40	72 x 72	GESM14
VK - 80x80 - 65568	VK MTJ40 80 x 80 GESM19/24	MTJ40, MTJZ40, MRJ40	80 x 80	GESM19/24
VK - 86x86 - 65572	VK MTJ40 86 x 86 GESM14	MTJ40, MTJZ40, MRJ40	86 x 86	GESM14
VK - 40 - 65575	VK MTJ65 40 GESM14	MTJ65, MTJZ65, MRJ65	Ø 40	GESM14
VK - 42x42 - 65576	VK MTJ65 42 x 42 GESM14	MTJ65, MTJZ65, MRJ65	42 x 42	GESM14
VK - 50 - 65582	VK MTJ65 50 GESM14	MTJ65, MTJZ65, MRJ65	Ø 50	GESM14
VK - 57x57 - 65585	VK MTJ65 57 x 57 GESM14	MTJ65, MTJZ65, MRJ65	57 x 57	GESM14
VK - 60 - 65589	VK MTJ65 60 GESM14	MTJ65, MTJZ65, MRJ65	Ø 60	GESM14
VK - 60x60 - 65596	VK MTJ65 60 x 60 GESM14	MTJ65, MTJZ65, MRJ65	60 x 60	GESM14
VK - 65 - 65597	VK MTJ65 65 GESM14	MTJ65, MTJZ65, MRJ65	Ø 65	GESM14
VK - 70 - 65599	VK MTJ65 70 GESM14	MTJ65, MTJZ65, MRJ65	Ø 70	GESM14
VK - 72x72 - 65601	VK MTJ65 72 x 72 GESM14	MTJ65, MTJZ65, MRJ65	72 x 72	GESM14
VK - 80 - 65603	VK MTJ65 80 GESM19/24	MTJ65, MTJZ65, MRJ65	Ø 80	GESM19/24
VK - 80x80 - 65604	VK MTJ65 80 x 80 GESM19/24	MTJ65, MTJZ65, MRJ65	80 x 80	GESM19/24
VK - 85 - 65605	VK MTJ65 85 GESM19/24	MTJ65, MTJZ65, MRJ65	Ø 85	GESM19/24
VK - 86x86 - 65608	VK MTJ65 86 x 86 GESM19/24	MTJ65, MTJZ65, MRJ65	86 x 86	GESM19/24

Every care has been taken to ensure the accuracy of the information in this document, but we take no liability for any errors or omissions. We reserve the right to make changes without prior notice.

Designation	Description	Compatible with	Motor Type Flange	Coupling
VK - 90 - 65610	VK MTJ65 90 GESM24/28	MTJ65, MTJZ65, MRJ65	Ø 90	GESM24/28
VK - 100 - 65616	VK MTJ65 100 GESM14	MTJ65, MTJZ65, MRJ65	Ø 100	GESM14
VK - 120 - 65618	VK MTJ65 120 GESM19/24	MTJ65, MTJZ65, MRJ65	Ø 120	GESM19/24
VK - 42x42 - 65633	VK MTJ80 42 x 42 GESM19/24	MTJ80, MTJZ80, MRJ80	42 x 42	GESM19/24
VK - 50 - 65634	VK MTJ80 50 GESM19/24	MTJ80, MTJZ80, MRJ80	Ø 50	GESM19/24
VK - 60 - 65635	VK MTJ80 60 GESM19/24	MTJ80, MTJZ80, MRJ80	Ø 60	GESM19/24
VK - 60x60 - 65638	VK MTJ80 60 x 60 GESM19/24	MTJ80, MTJZ80, MRJ80	60 x 60	GESM19/24
VK - 65 - 65639	VK MTJ80 65 GESM19/24	MTJ80, MTJZ80, MRJ80	Ø 65	GESM19/24
VK - 70 - 65640	VK MTJ80 70 GESM19/24	MTJ80, MTJZ80, MRJ80	Ø 70	GESM19/24
VK - 80- 65642	VK MTJ80 80 GESM19/24	MTJ80, MTJZ80, MRJ80	Ø 80	GESM19/24
VK - 80x80 - 65643	VK MTJ80 80 x 80 GESM19/24	MTJ80, MTJZ80, MRJ80	80 x 80	GESM19/24
VK - 90 - 65645	VK MTJ80 90 GESM24/28	MTJ80, MTJZ80, MRJ80	Ø 90	GESM24/28
VK - 90x90 - 65646	VK MTJ80 90 x 90 GESM24/28	MTJ80, MTJZ80, MRJ80	90 x 90	GESM24/28
VK - 106 - 65647	VK MTJ80 106 GESM24/28	MTJ80, MTJZ80, MRJ80	Ø 106	GESM24/28
VK - 115 - 65649	VK MTJ80 115 GESM24/28	MTJ80, MTJZ80, MRJ80	Ø 115	GESM24/28
VK - 116x116 - 65651	VK MTJ80 116 x 116 GESM28/38	MTJ80, MTJZ80, MRJ80	116 x 116	GESM28/38
VK - 120 - 65652	VK MTJ80 120 GESM28/38	MTJ80, MTJZ80, MRJ80	Ø 120	GESM28/38
VK - 130x130 - 65653	VK MTJ80 130 x 130 GESM24/28	MTJ80, MTJZ80, MRJ80	130 x 130	GESM24/28
VK - 140 - 65654	VK MTJ80 140 GESM19/24	MTJ80, MTJZ80, MRJ80	Ø 140	GESM19/24
VK - 142x142 - 65657	VK MTJ80 142 x 142 GESM24/28	MTJ80, MTJZ80, MRJ80	142 x 142	GESM24/28
VK - 42x42 - 65659	VK MTJ110 42 x 42 GESM19/24	MTJ110, MRJ110	42 x 42	GESM19/24
VK - 50 - 65660	VK MTJ110 50 GESM19/24	MTJ110, MRJ110	Ø 50	GESM19/24
VK - 90 - 65662	VK MTJ110 90 GESM24/28	MTJ110, MRJ110	Ø 90	GESM24/28
VK - 106 - 65664	VK MTJ110 106 GESM28/38	MTJ110, MRJ110	Ø 106	GESM28/38
VK - 120 - 65665	VK MTJ110 120 GESM28/38	MTJ110, MRJ110	Ø 120	GESM28/38
VK - 130x130 - 65668	VK MTJZ110 130 x 130 EK7 150	MTJZ110	130 x 130	EK7 150
VK - 132x132 - 65666	VK MTJ110 132 x 132 GESM28/38	MTJ110, MRJ110	132 x 132	GESM28/38

Every care has been taken to ensure the accuracy of the information in this document, but we take no liability for any errors or omissions. We reserve the right to make changes without prior notice.