Motor adapters MTJ ECO

Motor adapters for Linear Units MTJ ECO.
Mounting screws are included!

Please note that coupling must be ordered separately.

Note: This is an dummy item. The motor flange will be designed after receipt of order and drawing (.stp file) of requested motor type. The geometry of motor flange can be changed in order to adapt it to a requested motor type.

Dimensions in mm.

For order information, see Order Codes.



Every care has been taken to ensure the accuracy of the information in this document, but we take no liability for any errors or omissions. We reserve the right to make changes without prior notice.

General Data

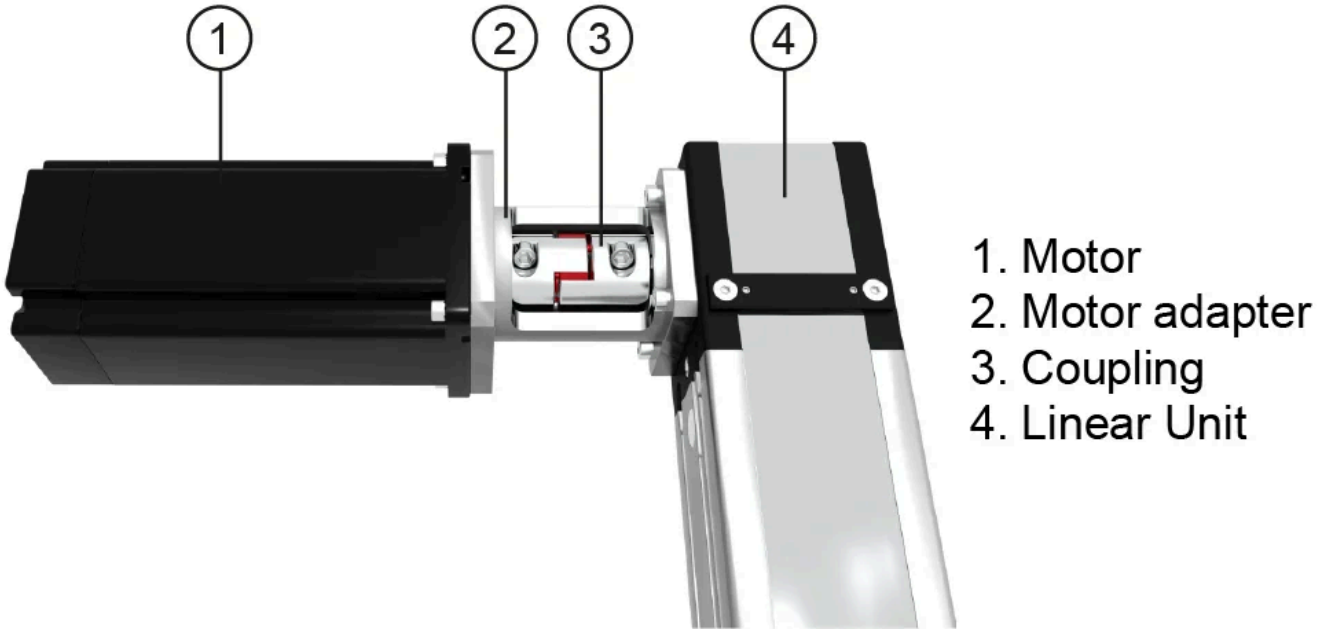

Designation	Description	Compatible with	Motor Type Flange	Coupling
VK - 55 - 65757	VK MTJ40ECO 55 GESM14	MTJ40ECO	Ø 55	GESM14
VK - 60x60 - 65759	VK MTJ40ECO 60 X 60 GESM14	MTJ40ECO	60 x 60	GESM14
VK - 65 - 65760	VK MTJ40ECO 65 GESM14	MTJ40ECO	Ø 65	GESM14
VK - 70x70 - 65761	VK MTJ40ECO 70 X 70 GESM14	MTJ40ECO	70 x 70	GESM14
VK - 80 - 65763	VK MTJ40ECO 80 GESM14	MTJ40ECO	Ø 80	GESM14
VK - 85x85 - 65764	VK MTJ40ECO 85 X 85 GESM14	MTJ40ECO	85 x 85	GESM14

Every care has been taken to ensure the accuracy of the information in this document, but we take no liability for any errors or omissions. We reserve the right to make changes without prior notice.