Motor adapters CTJ

Motor adapters for Linear Units CTJ.
Mounting screws are included!

Please note that coupling must be ordered separately.

Note: This is an dummy item. The motor flange will be designed after receipt of order and drawing (.stp file) of requested motor type. The geometry of motor flange can be changed in order to adapt it to a requested motor type.

Dimensions in mm.

For order information, see Order Codes.



Every care has been taken to ensure the accuracy of the information in this document, but we take no liability for any errors or omissions. We reserve the right to make changes without prior notice.

General Data

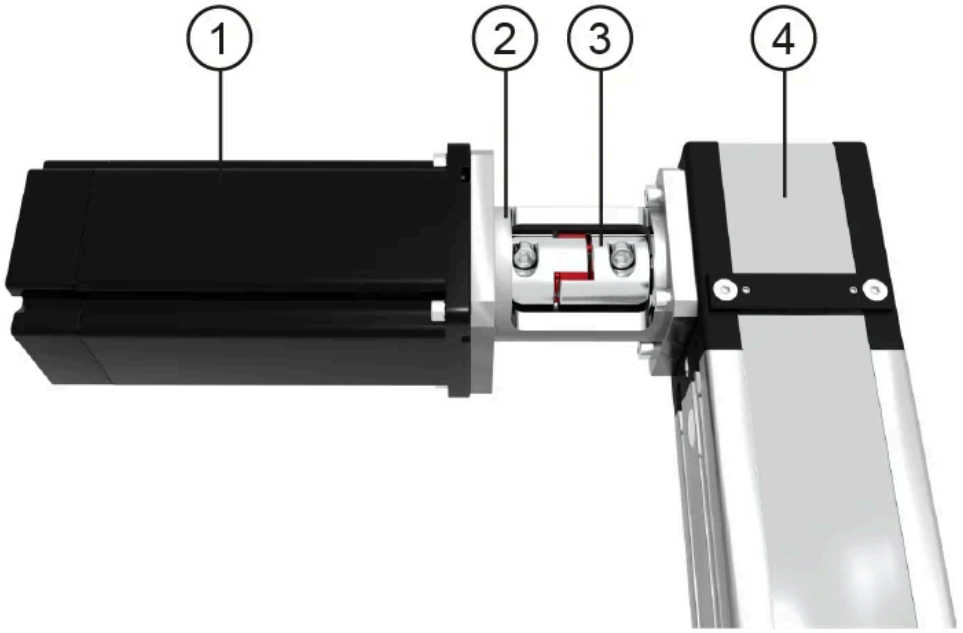

1. Motor
2. Motor adapter
3. Coupling
4. Linear Unit

Designation	Description	Compatible with	Motor Type Flange	Coupling
VK - 40 - 65765	VK CTJ90 40 GESM14	CTJ90	Ø 40	GESM14
VK - 60x60 - 65766	VK CTJ90 60 X 60 GESM14	CTJ90	60 x 60	GESM14
VK - 70 - 65767	VK CTJ90 70 GESM14	CTJ90	Ø 70	GESM14
VK - 40 - 65768	VK CTJ110 40 GESM14	CTJ110	Ø 40	GESM14
VK - 50 - 65770	VK CTJ110 50 GESM14	CTJ110	Ø 50	GESM14
VK - 60 - 65771	VK CTJ110 60 GESM14	CTJ110	Ø 60	GESM14
VK - 60x60 - 65772	VK CTJ110 60 x 60 GESM14	CTJ110	60 x 60	GESM14
VK - 65 - 65773	VK CTJ110 65 GESM14	CTJ110	Ø 65	GESM14
VK - 70 - 65774	VK CTJ110 70 GESM14	CTJ110	Ø 70	GESM14
VK - 72x72 - 65775	VK CTJ110 72 x 72 GESM14	CTJ110	72 x 72	GESM14
VK - 80 - 65776	VK CTJ110 80 GESM19/24	CTJ110	Ø 80	GESM19/24
VK - 84 - 65777	VK CTJ110 84 GESM19/24	CTJ110	Ø 84	GESM19/24
VK - 86x86 - 65778	VK CTJ110 86 x 86 GESM14	CTJ110	86 x 86	GESM14
VK - 40 - 65785	VK CTJ145 44 GESM19/24	CTJ145	Ø 44	GESM19/24
VK - 50 - 65787	VK CTJ145 50 GESM19/24	CTJ145	Ø 50	GESM19/24
VK - 60 - 65790	VK CTJ145 60 GESM19/24	CTJ145	Ø 60	GESM19/24
VK - 70 - 65794	VK CTJ145 70 GESM19/24	CTJ145	Ø 70	GESM19/24
VK - 76x76 - 65795	VK CTJ145 76 x 76 GESM24/28	CTJ145	76 x 76	GESM24/28
VK - 84 - 65797	VK CTJ145 84 GESM19/24	CTJ145	Ø 84	GESM19/24
VK - 86x86 - 65799	VK CTJ145 86 x 86 GESM19/24	CTJ145	86 x 86	GESM19/24
VK - 90 - 65800	VK CTJ145 90 GESM24/28	CTJ145	Ø 90	GESM24/28
VK - 106 - 65804	VK CTJ145 106 GESM24/28	CTJ145	Ø 106	GESM24/28
VK - 120 - 65806	VK CTJ145 120 GESM24/28	CTJ145	Ø 120	GESM24/28
VK - 80 - 65808	VK CTJ200 80 GESM24/28	CTJ200	Ø 80	GESM24/28
VK - 90 - 65809	VK CTJ200 90 GESM24/28	CTJ200	Ø 90	GESM24/28
VK - 110 - 65810	VK CTJ200 110 GESM28/38	CTJ200	Ø 110	GESM28/38

Every care has been taken to ensure the accuracy of the information in this document, but we take no liability for any errors or omissions. We reserve the right to make changes without prior notice.

Designation	Description	Compatible with	Motor Type Flange	Coupling
VK - 120 - 65811	VK CTJ200 120 GESM28/38	CTJ200	Ø 120	GESM28/38
VK - 142x142 - 65813	VK CTJ200 142 x 142 GESM38/45	CTJ200	142 x 142	GESM38/45
VK - 150 - 65816	VK CTJ200 150 GESM38/45	CTJ200	Ø 150	GESM38/45
VK - 176x176 - 65817	VK CTJ200 176 x 176 GESM38/45	CTJ200	176 x 176	GESM38/45

Every care has been taken to ensure the accuracy of the information in this document, but we take no liability for any errors or omissions. We reserve the right to make changes without prior notice.