Motor adapters CTV / MTV

Motor adapters for Linear Units CTV and MTV.
Mounting screws are included!

Please note that coupling must be ordered separately.

Note: This is an dummy item. The motor flange will be designed after receipt of order and drawing (.stp file) of requested motor type. The geometry of motor flange can be changed in order to adapt it to a requested motor type.

Dimensions in mm.

For order information, see Order Codes.



Every care has been taken to ensure the accuracy of the information in this document, but we take no liability for any errors or omissions. We reserve the right to make changes without prior notice.

General Data

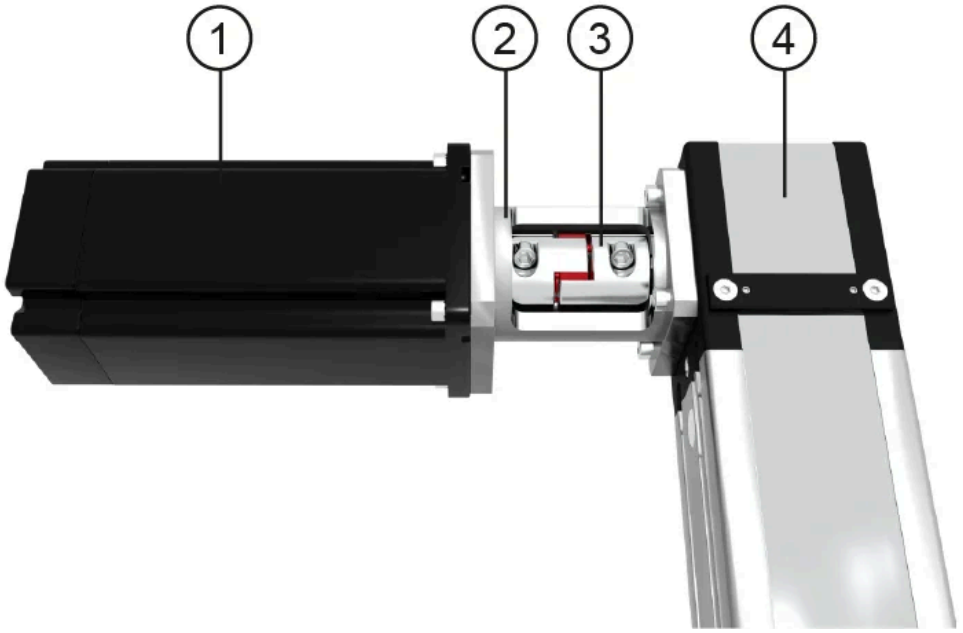

1. Motor
2. Motor adapter
3. Coupling
4. Linear Unit

Designation	Description	Compatible with	Motor Type Flange	Coupling
VK - 42x42 - 105030	VK MTV40 42x42 EKL10	MTV40	42 x 42	EKL10
VK - 60x60 - 105031	VK MTV40 60x60 EKL10	MTV40	60 x 60	EKL10
VK - 38x38 - 65676	VK CTV90 38 x 38 GESM9	CTV90	38 x 38	GESM9
VK - 42x42 - 65677	VK CTV90 42 x 42 GESM14	CTV90	42 x 42	GESM14
VK - 50 - 65679	VK CTV90 50 GESM14	CTV90	Ø 50	GESM14
VK - 56x56 - 65680	VK CTV90 56 x 56 GESM14	CTV90	56 x 56	GESM14
VK - 60x60 - 65682	VK CTV90 60 x 60 GESM14	CTV90	60 x 60	GESM14
VK - 64 - 65701	VK CTV110 MTV65 64 GESM	CTV110, MTV65	Ø 64	GESM14
VK - 70 - 65705	VK CTV110 MTV65 70 GESM	CTV110, MTV65	Ø 70	GESM14
VK - 42 - 65685	VK CTV110 MTV65 42 GESM	CTV110, MTV65	Ø 42	GESM14
VK - 42x42 - 65692	VK CTV110 MTV65 42 x 42 GESM	CTV110, MTV65	42 x 42	GESM14
VK - 50 - 65695	VK CTV110 MTV65 50 GESM	CTV110, MTV65	Ø 50	GESM14
VK - 56x56 - 65698	VK CTV110 MTV65 56 x 56 GESM	CTV110, MTV65	56 x 56	GESM14
VK - 60x60 - 65699	VK CTV110 MTV65 60 x 60 GESM	CTV110, MTV65	60 x 60	GESM14
VK - 70x70 - 65707	VK CTV110 MTV65 70 x 70 GESM	CTV110, MTV65	70 x 70	GESM14
VK - 72x72 - 65712	VK CTV110 MTV65 72 x 72 GESM	CTV110, MTV65	72 x 72	GESM14
VK - 80 - 65713	VK CTV110 MTV65 80 GESM19/24	CTV110, MTV65	Ø 80	GESM19/24
VK - 80x80 - 65715	VK CTV110 MTV65 80 x 80 GESM19/24	CTV110, MTV65	80 x 80	GESM19/24
VK - 86x86 - 65719	VK CTV110 MTV65 86 x 86 GESM14	CTV110, MTV65	86 x 86	GESM14
VK - 56x56 - 65733	VK CTV145 MTV80 56 x 56 GESM14	CTV145, MTV80	56 x 56	GESM14
VK - 60x60 - 65735	VK CTV145 MTV80 60 x 60 GESM14	CTV145, MTV80	60 x 60	GESM14
VK - 70 - 65736	VK CTV145 MTV80 70 GESM14	CTV145, MTV80	Ø 70	GESM14
VK - 70x70 - 65737	VK CTV145 MTV80 70 x 70 GESM14	CTV145, MTV80	70 x 70	GESM14
VK - 72x72 - 65738	VK CTV145 MTV80 72 x 72 GESM14	CTV145, MTV80	72 x 72	GESM14
VK - 80x80 - 65745	VK CTV145 MTV80 80 x 80 GESM19/24	CTV145, MTV80	80 x 80	GESM19/24
VK - 82x82 - 65747	VK CTV145 MTV80 82 x 82 GESM14	CTV145, MTV80	82 x 82	GESM14

Every care has been taken to ensure the accuracy of the information in this document, but we take no liability for any errors or omissions. We reserve the right to make changes without prior notice.

Designation	Description	Compatible with	Motor Type Flange	Coupling
VK - 84 - 65748	VK CTV145 MTV80 84 GESM19/24	CTV145, MTV80	Ø 84	GESM19/24
VK - 96x96 - 65750	VK CTV145 MTV80 96 x 96 GESM19/24	CTV145, MTV80	96 x 96	GESM19/24
VK - 100x100 - 65753	VK CTV145 MTV80 100 x 100 GESM19/24	CTV145, MTV80	100 x 100	GESM19/24
VK - 105 - 65754	VK CTV145 MTV80 105 GESM14	CTV145, MTV80	Ø 105	GESM14
VK - 96x96 - 69419	VK CTV200 MTV110 96 x 96 GESM19/24	CTV200, MTV110	96 x 96	GESM19/24
VK - 80x80 - 65755	VK CTV200 MTV110 80 x 80 GESM19/24	CTV200, MTV110	80 x 80	GESM19/24
VK - 100x100 - 65756	VK CTV200 MTV110 100 x 100 GESM19/24	CTV200, MTV110	100 x 100	GESM19/24
VK - 130x130 - 78722	VK CTV200 MTV110 130 x 130 GESM24/28	CTV200, MTV110	130 x 130	GESM24/28
VK - 80 - 78723	VK CTV200 MTV110 80 GESM24/28	CTV200, MTV110	Ø 80	GESM24/28
VK - 90 - 78727	VK CTV200 MTV110 90 GESM24/28	CTV200, MTV110	Ø 90	GESM24/28
VK - 85x85 - 78740	VK CTV200 MTV110 85 x 85 GESM19/24	CTV200, MTV110	85 x 85	GESM19/24

Every care has been taken to ensure the accuracy of the information in this document, but we take no liability for any errors or omissions. We reserve the right to make changes without prior notice.