Magnetic Field Sensors

Dimension in mm.

Note! Mounting of the Magnetic field sensor on PNCE requires a HPNCE sensor holder.

Sensor Type: GMR sensor
Switching function: NC or NO
Output: PNP
Operating Voltage (V DC): 10 ~ 28
Max. Switching Current (mA): 200
Max. Power Rating (W): 5.5
Voltage drop: 1.5 V / 200mA max.
Current consumption: 10mA / 24 V max.
Switching Frequency (Hz): 1000
Ambient Temperature (°C): -10 ~ +70
Shock/vibration: 50 G / 9 G
Protection Class: IP67
LED indicator: Yellow
Electrical connection: M8, 3-pin
Cable material length: PU - 0.3m
Extension cable: Energy chain compliant

Every care has been taken to ensure the accuracy of the information in this document, but we take no liability for any errors or omissions. We reserve the right to make changes without prior notice.

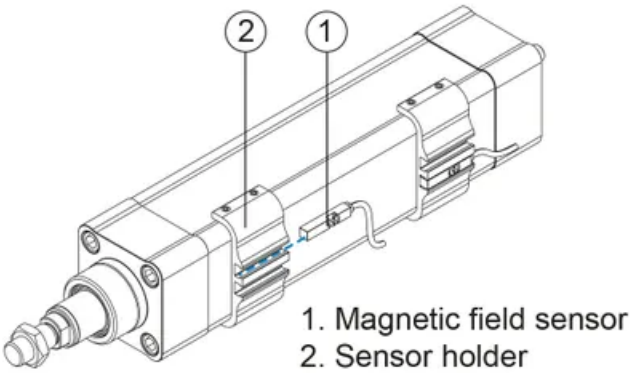

General Data

Designation	Compatible with	Type	Cable Length (m)
SMT-65TP-K NC - 74073	PNCE series	Magnetic sensor	-
SMT-65TP-K NO - 74074	PNCE series	Magnetic sensor	-
HPNCE 32 - 68997	PNCE 32	Sensor holder	-
HPNCE 40 - 68998	PNCE 40	Sensor holder	-
HPNCE 50 - 68999	PNCE 50	Sensor holder	-
HPNCE 63 - 69000	PNCE 63	Sensor holder	-
HPNCE 80 - 79053	PNCE 80	Sensor holder	-
HPNCE 100 - 79054	PNCE 100	Sensor holder	-
Cable - 8146	PNCE series	Straight connector extension cable	2
Cable - 8147	PNCE series	Straight connector extension cable	5

Every care has been taken to ensure the accuracy of the information in this document, but we take no liability for any errors or omissions. We reserve the right to make changes without prior notice.

Designation	Compatible with	Type	Cable Length (m)
Cable - 9017	PNCE series	Angled connector extension cable	2
Cable - 9019	PNCE series	Angled connector extension cable	5

Dimensions

HPNCE Sensor holder

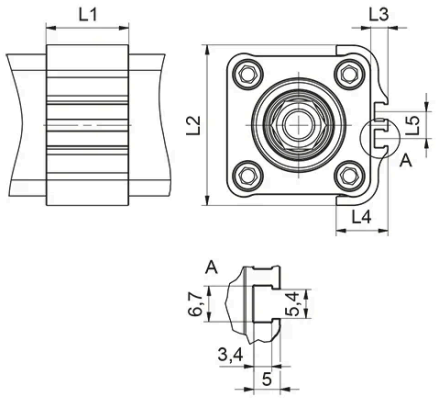

SMT-65TP-K

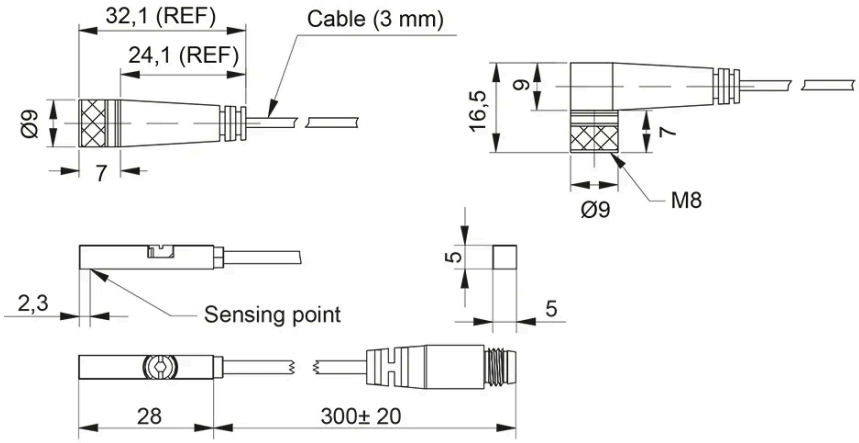

Designation	L1	L2	L3	L4	L5
SMT-65TP-K NC - 74073	-	-	-	-	-
SMT-65TP-K NO - 74074	-	-	-	-	-
HPNCE 32 - 68997	30	53	6.5	19.5	10
HPNCE 40 - 68998	30	60	6.5	19.5	10
HPNCE 50 - 68999	30	71	6.5	22.5	10
HPNCE 63 - 69000	30	81	6.5	22.5	10
HPNCE 80 - 79053	30	98.3	6	25	10
HPNCE 100 - 79054	30	115.4	6	25	10
Cable - 8146	-	-	-	-	-
Cable - 8147	-	-	-	-	-
Cable - 9017	-	-	-	-	-
Cable - 9019	-	-	-	-	-

Every care has been taken to ensure the accuracy of the information in this document, but we take no liability for any errors or omissions. We reserve the right to make changes without prior notice.