DSS28

Full extension consisting of two guide rails made of fixed and movable elements and an S-shaped intermediate element. This has a high moment of inertia and high rigidity with slim size. This results in a high loading capacity with low deflection in the extended state.



The DS series is available in three different designs: Version S with one-sided extension, Version B with locking system in closed position for one-sided extension (DSB) and Version D with double-sided extension (DSD).

Number of holes shown in table are accessible holes/total holes.

Special strokes are defined as deviations from standard stroke H. See section "Special strokes" in the document Technical Information for Telescopic Rail Heavy.

System Load Capacity Radial value refers to a pair of rails. Dimensions in mm.

See Technical Information for further details, operating conditions and installation instructions.

Every care has been taken to ensure the accuracy of the information in this document, but we take no liability for any errors or omissions. We reserve the right to make changes without prior notice.

General Data

DSS28

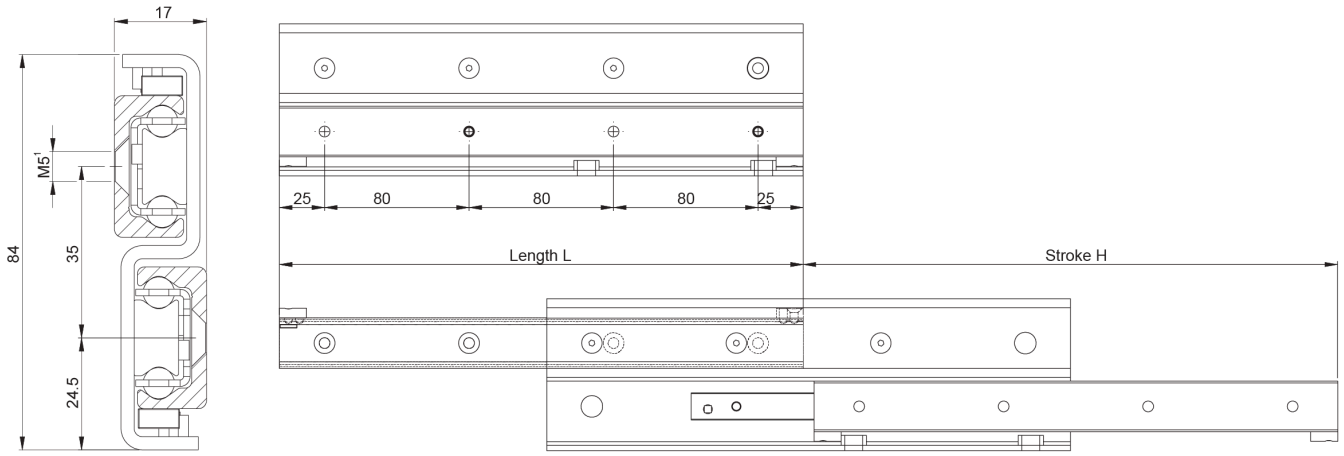

¹ Fixing holes for countersunk head screws according to DIN 7991.

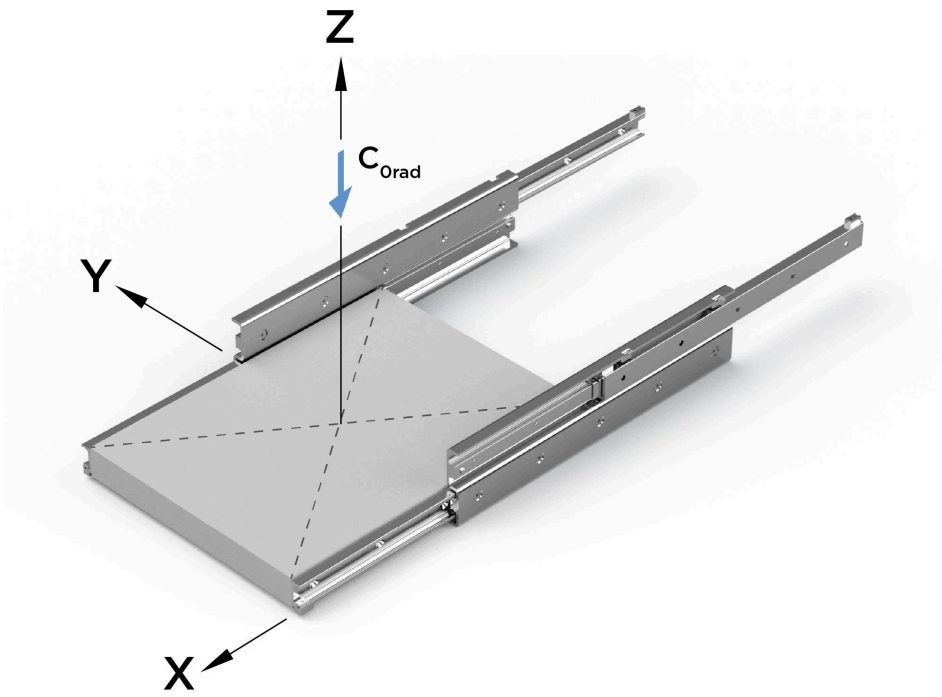

Designation	Length	Stroke	Weight (kg/m)	System Load Capacity Radial (N)	Number of Fixing Holes
DSS28-290	290	296	6.4	1140	3/4
DSS28-370	370	380	6.4	1538	4/5
DSS28-450	450	464	6.4	1938	4/6
DSS28-530	530	548	6.4	2340	6/7
DSS28-610	610	630	6.4	2752	6/8
DSS28-690	690	714	6.4	3154	7/9
DSS28-770	770	798	6.4	3556	7/10
DSS28-850	850	864	6.4	4222	9/11
DSS28-930	930	950	6.4	4480	9/12
DSS28-1010	1010	1034	6.4	4108	10/13

Every care has been taken to ensure the accuracy of the information in this document, but we take no liability for any errors or omissions. We reserve the right to make changes without prior notice.

Designation	Length	Stroke	Weight (kg/m)	System Load Capacity Radial (N)	Number of Fixing Holes
DSS28-1090	1090	1118	6.4	3792	10/14
DSS28-1170	1170	1202	6.4	3522	12/15
DSS28-1250	1250	1266	6.4	3390	12/16
DSS28-1330	1330	1350	6.4	3172	13/17
DSS28-1410	1410	1434	6.4	2980	13/18
DSS28-1490	1490	1518	6.4	2810	15/19

Every care has been taken to ensure the accuracy of the information in this document, but we take no liability for any errors or omissions. We reserve the right to make changes without prior notice.