DBN22

Full extension consisting of two guide rails, both fixed and movable, and two sliders which together form the intermediate element. The size is similar to the DE series and offers good protection from dirt of the open ballcage.

Special strokes are defined as deviations from standard stroke H. See section "Special strokes" in the document Technical Information for Telescopic Rail Heavy.

System Load Capacity Radial and System Load Capacity Axial values refers to a pair of rails. Dimensions in mm.

See Technical Information for further details, operating conditions and installation instructions.



Every care has been taken to ensure the accuracy of the information in this document, but we take no liability for any errors or omissions. We reserve the right to make changes without prior notice.

General Data

DBN22

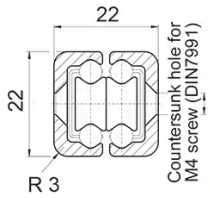

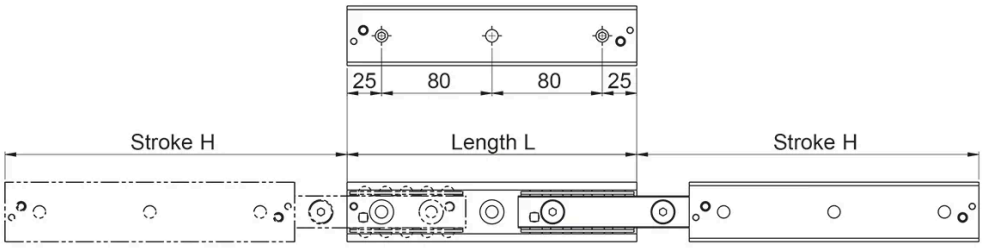

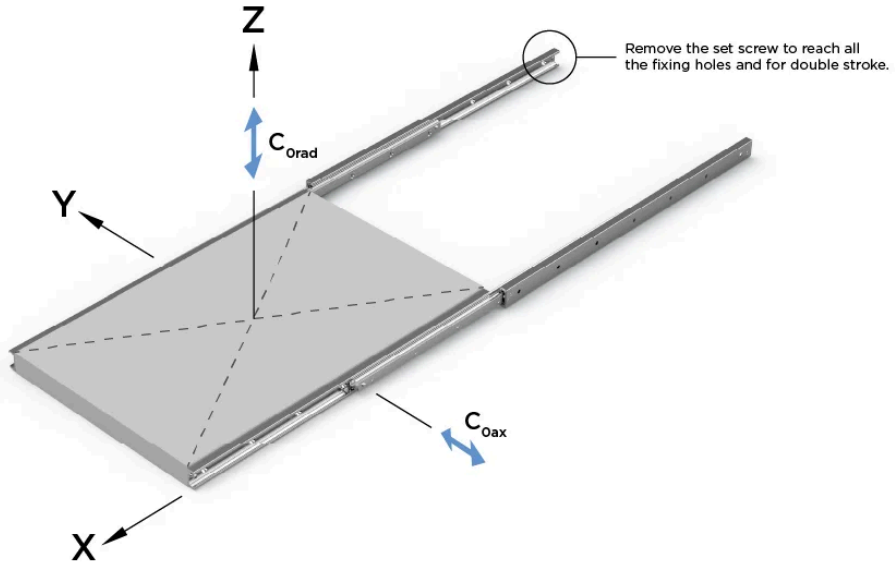

Designation	Length	Stroke	Weight (kg/m)	System Load Capacity Radial (N)	System Load Capacity Axial (N)
DBN22-130	130	152	2.64	238	166
DBN22-210	210	222	2.64	562	392
DBN22-290	290	308	2.64	472	472
DBN22-370	370	392	2.64	372	372
DBN22-450	450	462	2.64	324	324
DBN22-530	530	548	2.64	272	272
DBN22-610	610	632	2.64	234	234
DBN22-690	690	702	2.64	216	216
DBN22-770	770	788	2.64	190	190

Designation	Number of Fixing Holes
DBN22-130	2
DBN22-210	3
DBN22-290	4
DBN22-370	5
DBN22-450	6
DBN22-530	7
DBN22-610	8
DBN22-690	9

Every care has been taken to ensure the accuracy of the information in this document, but we take no liability for any errors or omissions. We reserve the right to make changes without prior notice.

Designation	Number of Fixing Holes
DBN22-770	10

Every care has been taken to ensure the accuracy of the information in this document, but we take no liability for any errors or omissions. We reserve the right to make changes without prior notice.