Pivoting Slot Nut, 7.7 × 4.0 mm

System: 20 - Slot 5
Type: T-nuts

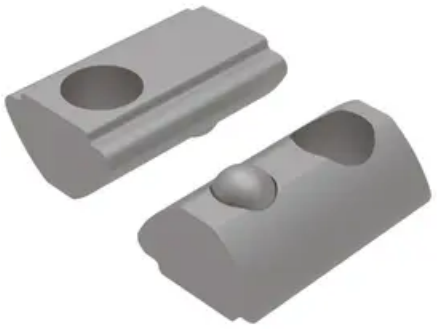

Every care has been taken to ensure the accuracy of the information in this document, but we take no liability for any errors or omissions. We reserve the right to make changes without prior notice.

General Data

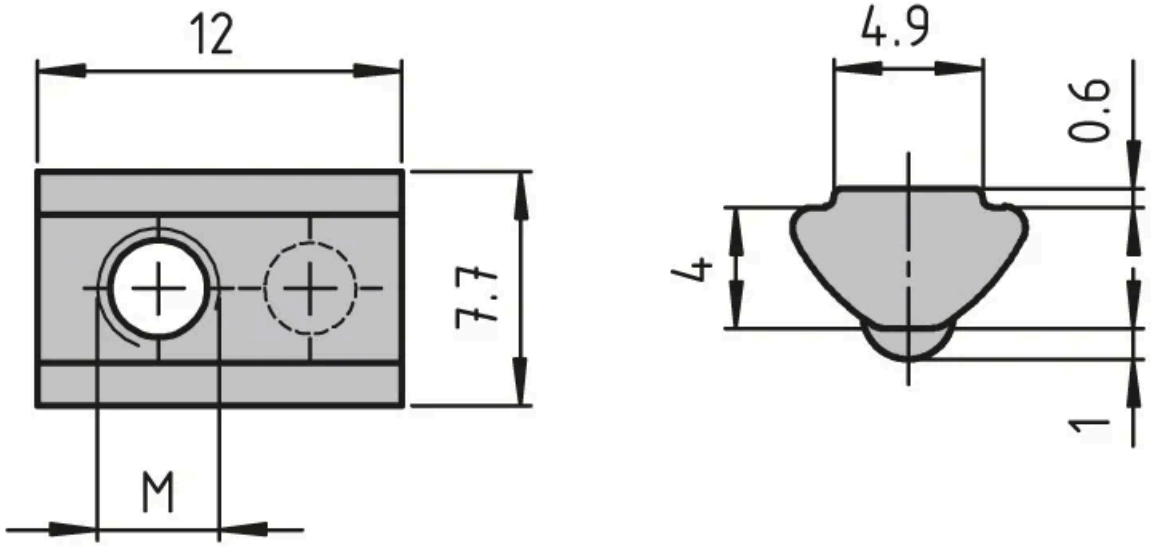

Designation	Description	System	Thread	Fmax (N)
PN4010	Pivoting slot nut, ball spring, step	20 - Slot 5	M3	500
PN4015	Pivoting slot nut, ball spring, step	20 - Slot 5	M4	500
PN4020	Pivoting slot nut, ball spring, step	20 - Slot 5	M5	500
PN2005	Pivoting slot nut profile, step L=1500	20 - Slot 5	-	-

Every care has been taken to ensure the accuracy of the information in this document, but we take no liability for any errors or omissions. We reserve the right to make changes without prior notice.