# Automatic Combination Connector

Quickly and reliably links two aluminium profiles without having to modify them.
Material: Galvanised steel

**System:** 30 - Slot 6; 20 - Slot 5
**Type:** Fasteners




Every care has been taken to ensure the accuracy of the information in this document, but we take no liability for any errors or omissions. We reserve the right to make changes without prior notice.



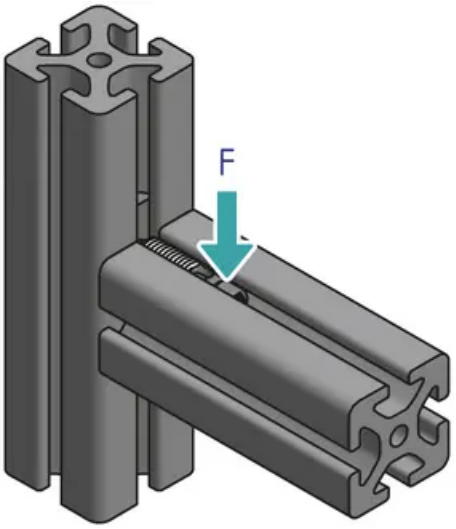


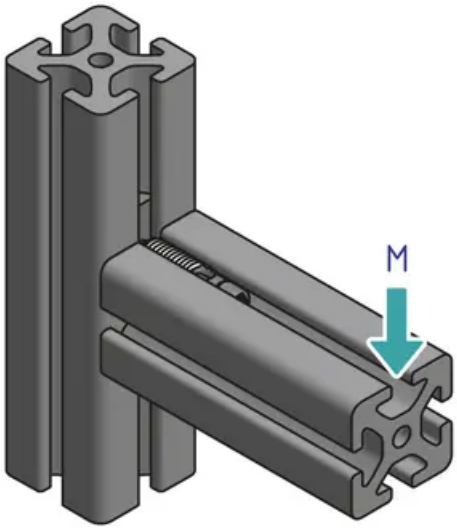



Every care has been taken to ensure the accuracy of the information in this document, but we take no liability for any errors or omissions. We reserve the right to make changes without prior notice.

# General Data

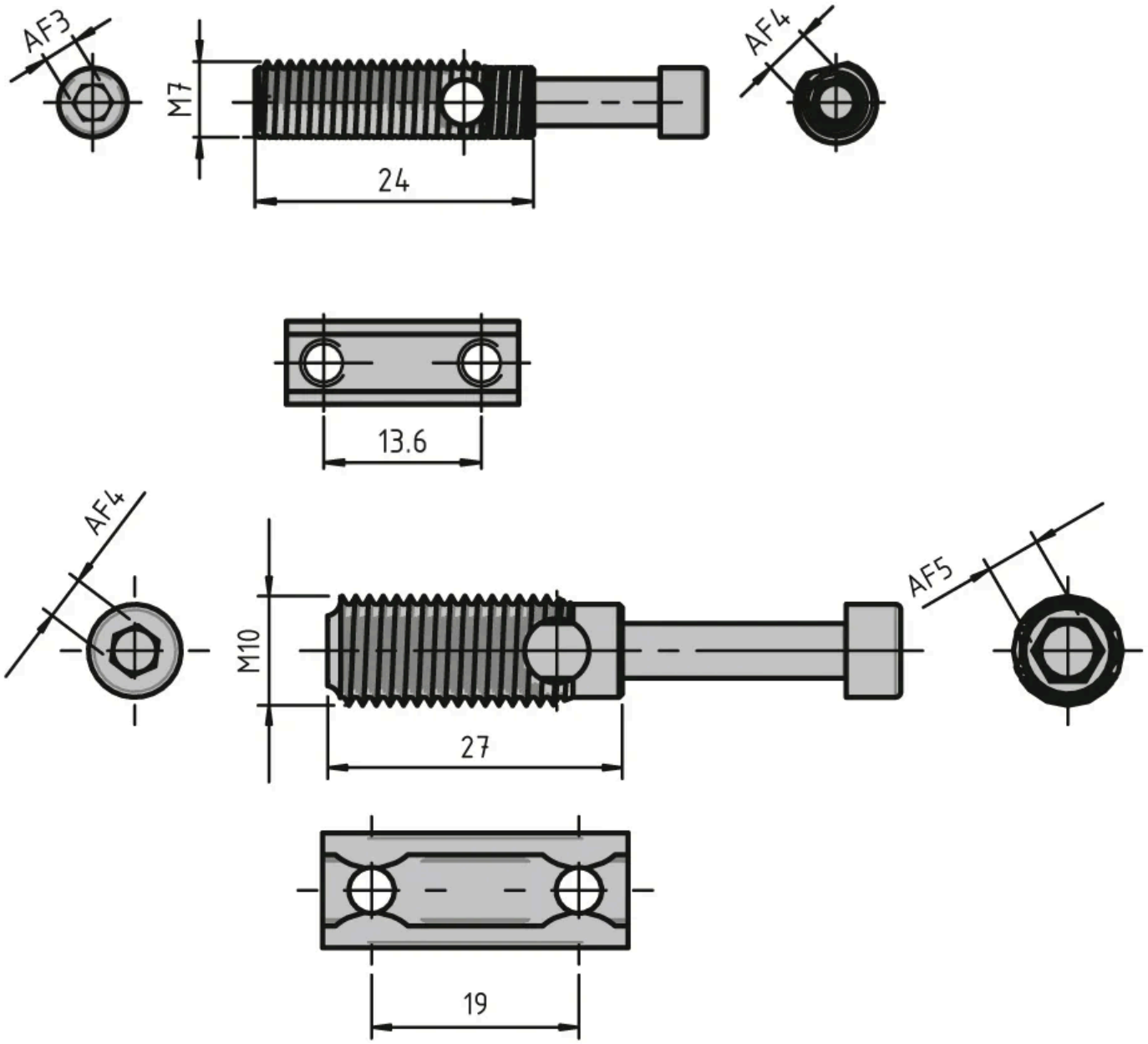


| Designation | Description | System | M (Nm) | F (N) |
|---|---|---|---|---|
| **PV1204** | Automatic combination connector 20 including slot nut with guide step | 20 - Slot 5 | 6 | 350 |
| **PV1205** | Automatic combination connector 30 including slot nut with guide step | 30 - Slot 6 | 35 | 600 |


Every care has been taken to ensure the accuracy of the information in this document, but we take no liability for any errors or omissions. We reserve the right to make changes without prior notice.