Adjustable Levelling Foot

Compact levelling knuckle foot that mounts on aluminium profiles.
Material: Housing: Plastic (PA), fibreglass-reinforced
Mechanism: Galvanised steel. Carrying capacity: 150 kg

System: 30 - Slot 6; 20 - Slot 5
Type: Feet



Every care has been taken to ensure the accuracy of the information in this document, but we take no liability for any errors or omissions. We reserve the right to make changes without prior notice.



General Data

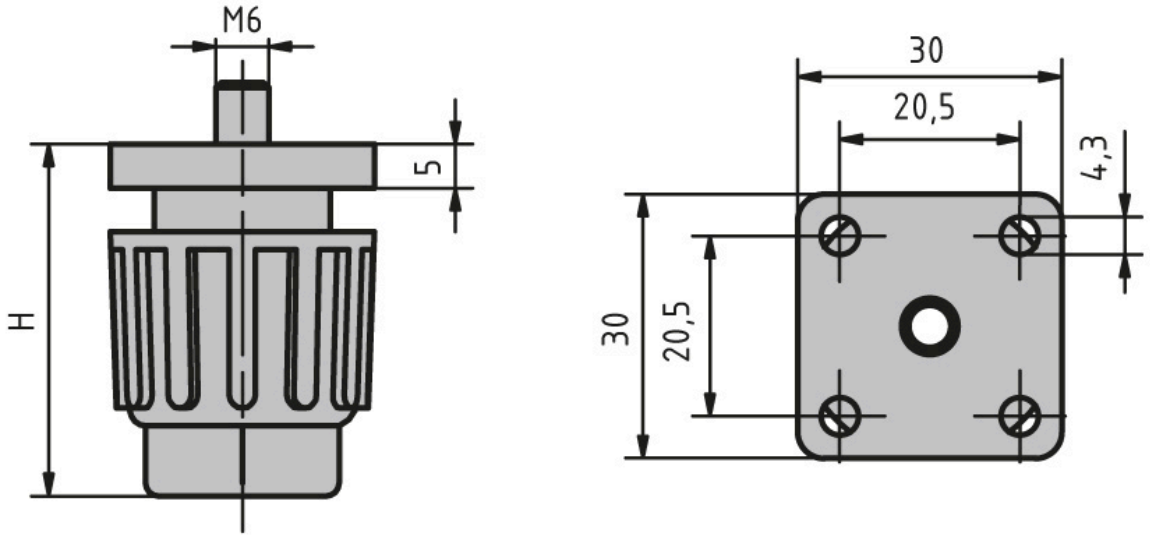

Designation	Description	Thread	H	Hole Spacing	Profile
PZ5109	Adjustable levelling foot	M6	35-50	20.5	30

Every care has been taken to ensure the accuracy of the information in this document, but we take no liability for any errors or omissions. We reserve the right to make changes without prior notice.