Height-Adjustable Floor Angle

Creates a height-adjustable link between aluminium profiles and the floor.
Package includes the adjustment screw and threaded plate.
Material: Die-cast zinc

Note: To install the ESD-ready floor angles, use a notched slot nut in order to make a conductive link.

System: 30 - Slot 6; 20 - Slot 5
Type: Feet



Every care has been taken to ensure the accuracy of the information in this document, but we take no liability for any errors or omissions. We reserve the right to make changes without prior notice.



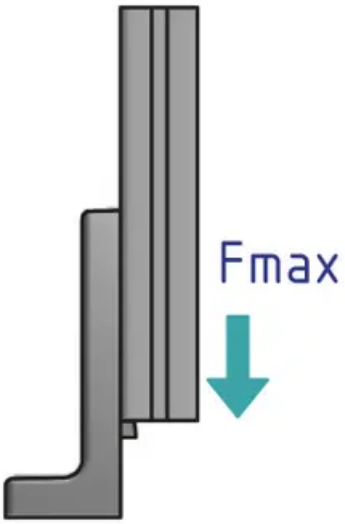

General Data

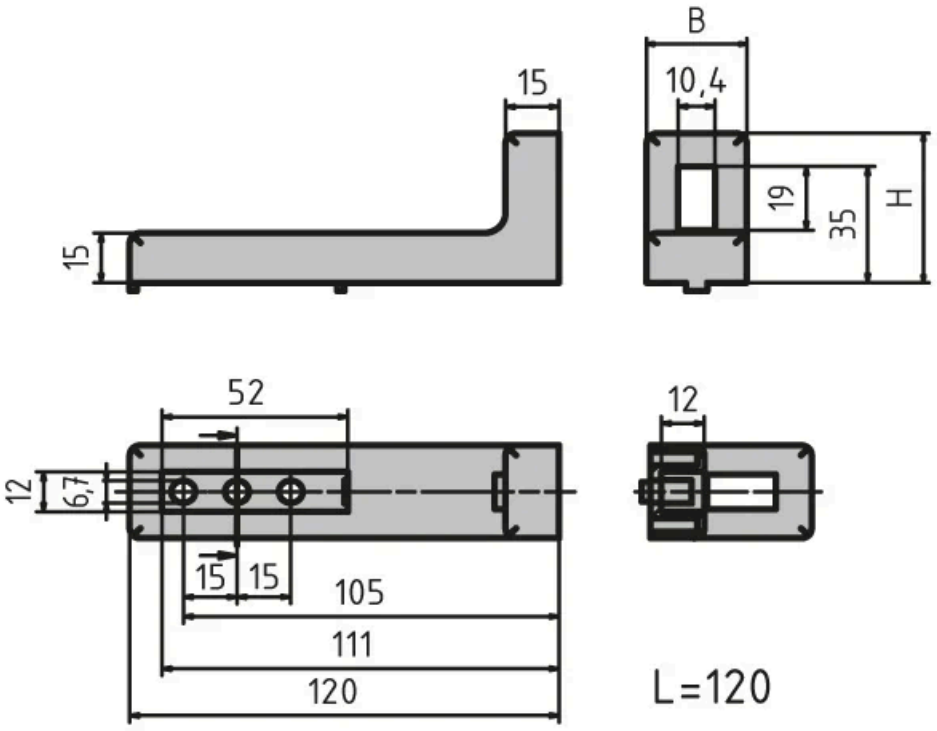

Designation	Material	ESD	Fmax (N)	L x H x W
PZ5021	Uncoated	Yes	2500	120 x 45 x 28
PZ3081	Black powder coated	-	2500	120 x 45 x 28

Every care has been taken to ensure the accuracy of the information in this document, but we take no liability for any errors or omissions. We reserve the right to make changes without prior notice.