Steering Castor

The castors run extremely smooth.
Particularly gentle to the floor.
Oil-resistant for use in workshops.
Suitable for ESD-sensitive areas.
Conductive material variant.

System: 40 - Slot 8; 30 - Slot 6; 20 - Slot 5
Type: Castors



Every care has been taken to ensure the accuracy of the information in this document, but we take no liability for any errors or omissions. We reserve the right to make changes without prior notice.



- Particularly gentle to the floor
- Oil-resistant for use in workshops
- Suitable for ESD-sensitive areas. Conductive material variant.

General Data

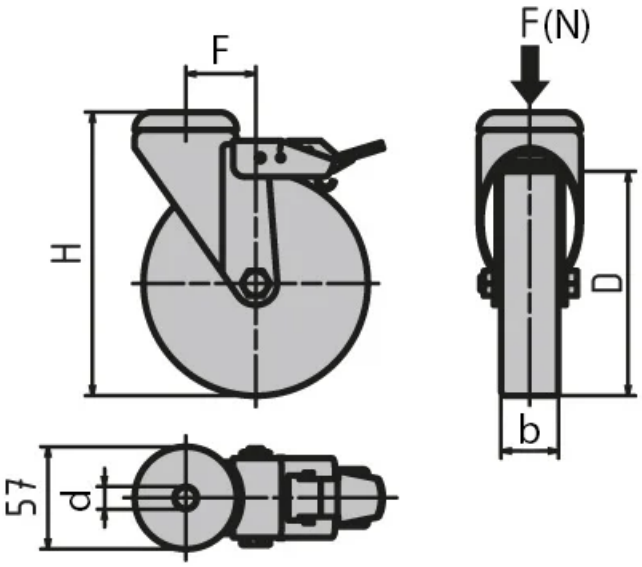

Designation	Description	D	F	H	Feature
RA5073	Thermoplastic rubber wheel, contains oil w. lock	75	29	98	-
RA5075	Rim (PA), thermoplastic rubber w. lock	80	39	108	Gentle to floor
RA5076	Rim (PA), thermoplastic rubber	80	39	108	Gentle to floor
RA5077	Rim (PA), thermoplastic rubber w. lock	100	39	133	Gentle to floor
RA5078	Rim (PA), thermoplastic rubber	100	39	133	Gentle to floor
RA5080	Reinforced PA, chemically resistant w. lock	100	39	133	oil-resistant
RA5081	Reinforced PA, chemically resistant	100	39	133	oil-resistant
RA5082	Reinforced PA, chemically resistant w. lock	125	39	158	oil-resistant
RA5083	Reinforced PA, chemically resistant	125	39	158	oil-resistant
RA5085	Thermoplastic rubber wheel, conductive thread guard	75	29	98	ESD
RA5086	Thermoplastic rubber wheel, conductive thread guard w. lock	80	39	108	ESD
RA5087	Thermoplastic rubber wheel, conductive thread guard	80	39	108	ESD
RA5088	Thermoplastic rubber wheel, conductive thread guard w. lock	100	39	133	ESD

Every care has been taken to ensure the accuracy of the information in this document, but we take no liability for any errors or omissions. We reserve the right to make changes without prior notice.

Designation	Description	D	F	H	Feature
RA5089	Thermoplastic rubber wheel, conductive thread guard	100	39	133	ESD

Designation	b	d	F (N)
RA5073	25	11	750
RA5075	32	13	800
RA5076	32	13	800
RA5077	32	13	1000
RA5078	32	13	1000
RA5080	32	13	1200
RA5081	32	13	1200
RA5082	32	13	1200
RA5083	32	13	1200
RA5085	32	11	500
RA5086	32	13	650
RA5087	32	13	650
RA5088	32	13	700
RA5089	32	13	700

Every care has been taken to ensure the accuracy of the information in this document, but we take no liability for any errors or omissions. We reserve the right to make changes without prior notice.