Clamping Bracket

Simple and reliable link between intersecting profiles.
Bracket with clamping lever for variable use.
Sets to any angle.
Material: Aluminium coloured die-cast zinc

System: 30 - Slot 6
Type: Angles Brackets and Corners; Fasteners



Every care has been taken to ensure the accuracy of the information in this document, but we take no liability for any errors or omissions. We reserve the right to make changes without prior notice.

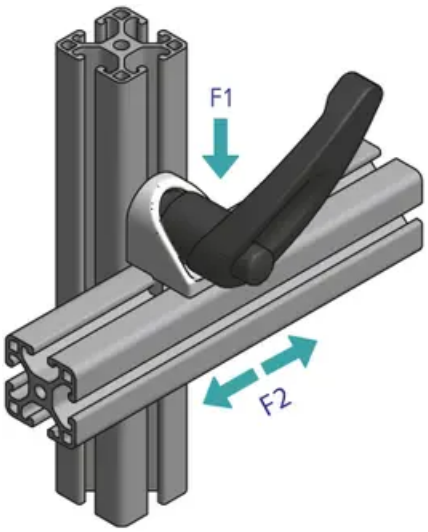



General Data

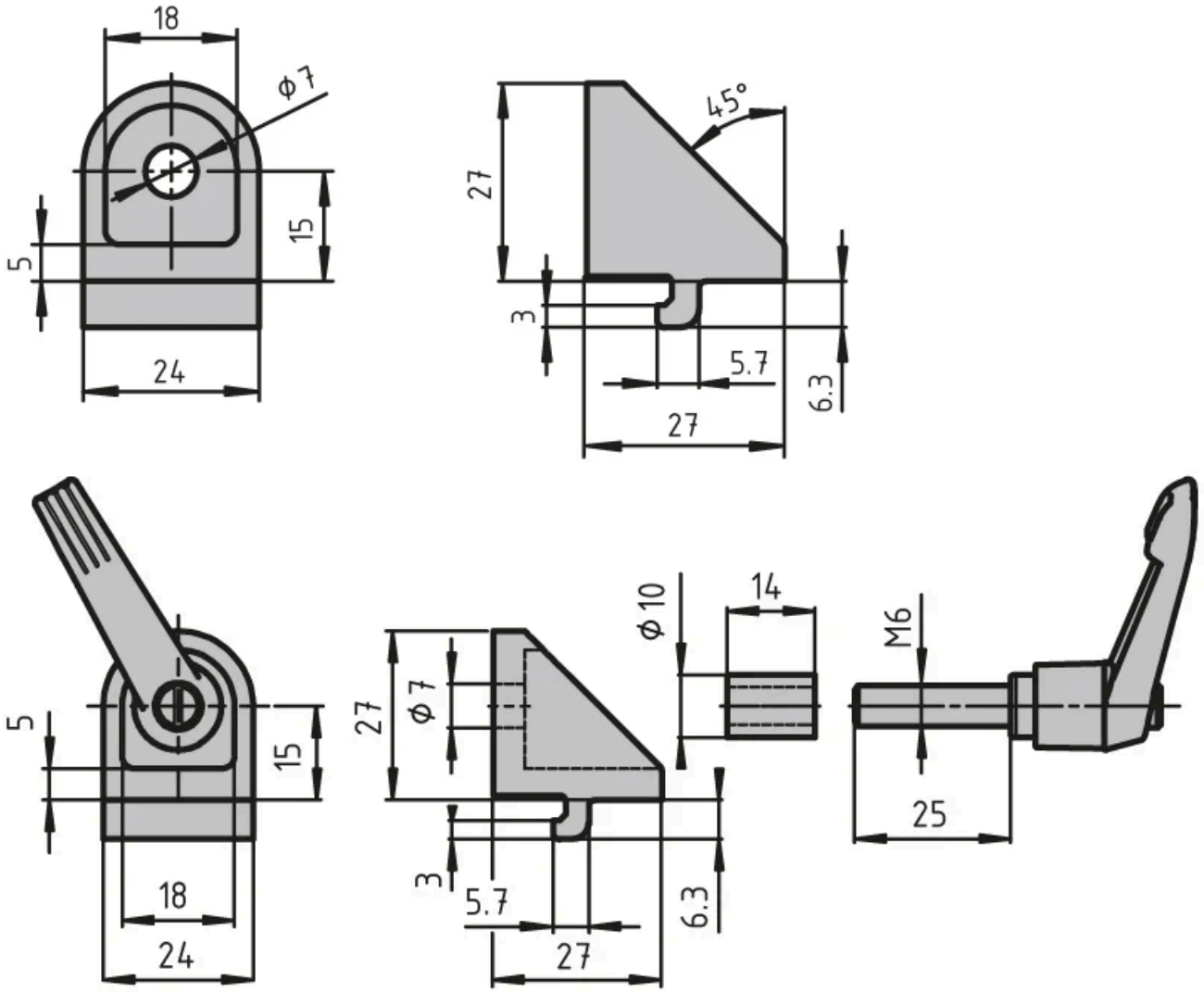

Designation	Description	System	F1 (N)	F2 (N)
PZ3090	Clamping bracket 30	30 - Slot 6	800	200

Every care has been taken to ensure the accuracy of the information in this document, but we take no liability for any errors or omissions. We reserve the right to make changes without prior notice.

Designation	Description	System	F1 (N)	F2 (N)
PZ3095	Clamping bracket 30 with clamping lever	30 - Slot 6	600	100

Every care has been taken to ensure the accuracy of the information in this document, but we take no liability for any errors or omissions. We reserve the right to make changes without prior notice.