Mini Plastic Hinge 20

On-site mount: by M5 × 10 countersunk screw and M5 slot 5 slot nut
Material: Wing: Plastic (PA), fibreglass-reinforced
Pin: Stainless steel

System: 20 - Slot 5
Type: Hinges



Every care has been taken to ensure the accuracy of the information in this document, but we take no liability for any errors or omissions. We reserve the right to make changes without prior notice.

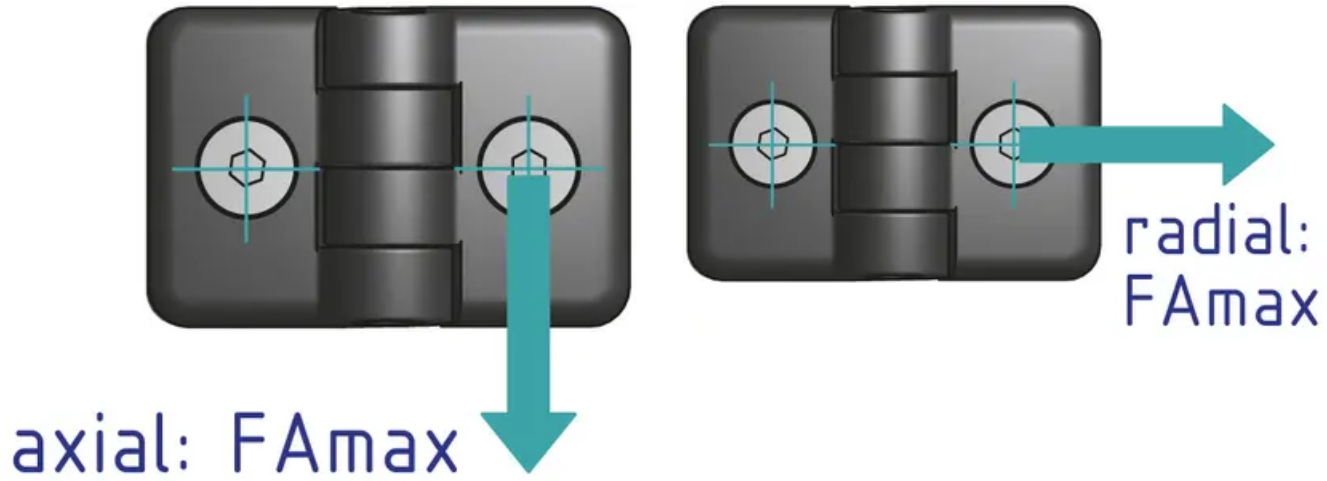



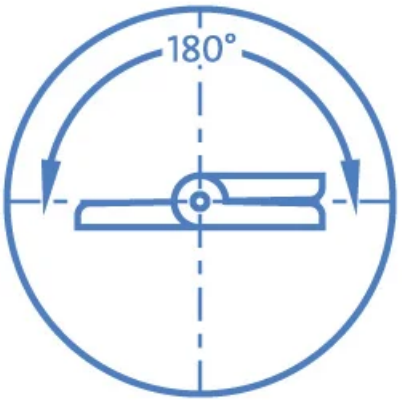

General Data

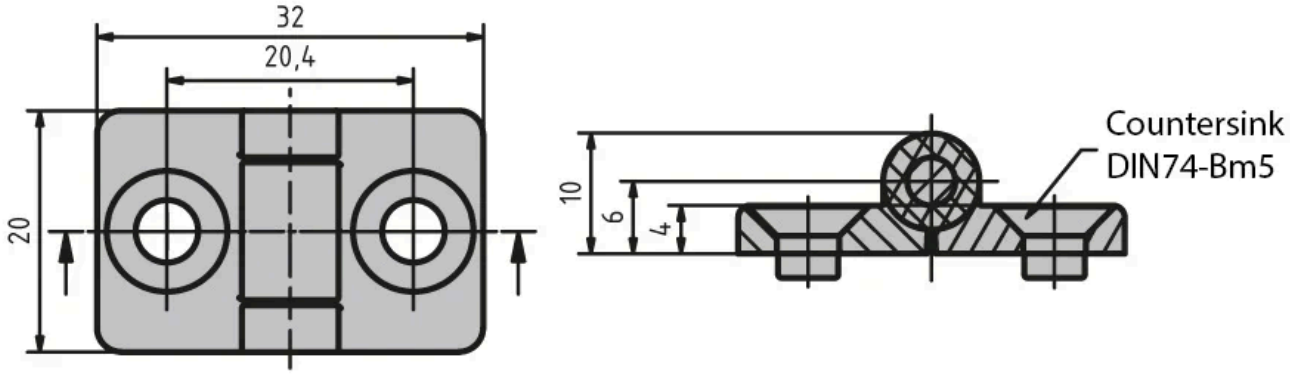

Designation	System	FAmax (N)	FRmax (N)
PZ4080	20 - Slot 5	240	300

Every care has been taken to ensure the accuracy of the information in this document, but we take no liability for any errors or omissions. We reserve the right to make changes without prior notice.