Plastic Double Hinge

On-site mount: by M6 × 16 countersunk screw and M6 slot 8 slot nut.
Material: Wing: Plastic (PA), fibreglass-reinforced
Pin: Stainless steel

System: 30 - Slot 6; 20 - Slot 5
Type: Hinges



Every care has been taken to ensure the accuracy of the information in this document, but we take no liability for any errors or omissions. We reserve the right to make changes without prior notice.

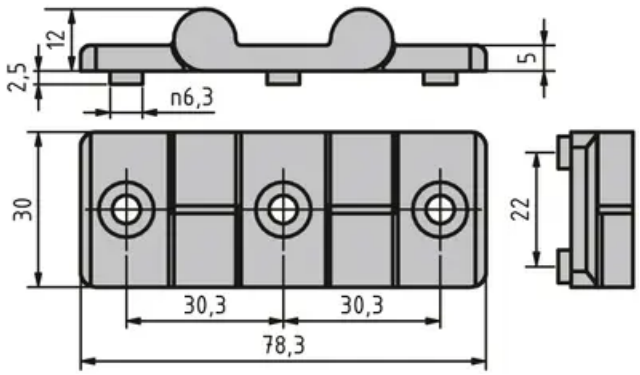



General Data

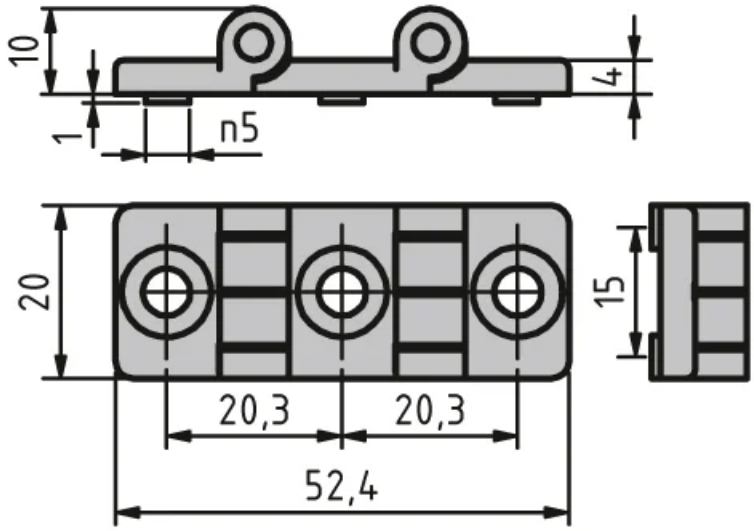

Designation	Description	System
PZ4085	Plastic double hinge	20 - Slot 5
PZ3110	Plastic double hinge	30 - Slot 6

Every care has been taken to ensure the accuracy of the information in this document, but we take no liability for any errors or omissions. We reserve the right to make changes without prior notice.