Die-Cast Zinc Hinge with Oblong Holes, No Unhinging

Directly links to frameless surface elements and, by creating an articulated link between two profiles, allows surfaces with frames to connect to the base frame.
No unhinging.
Material: Wing: Die-cast zinc with a black powder coat; Pin: Stainless steel
On-site mount

Note: Use a notched slot nut to ensure that the connection is ESD-ready.

System: 30 - Slot 6
Type: Hinges



Every care has been taken to ensure the accuracy of the information in this document, but we take no liability for any errors or omissions. We reserve the right to make changes without prior notice.



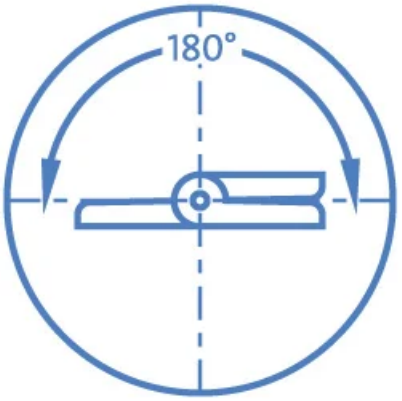

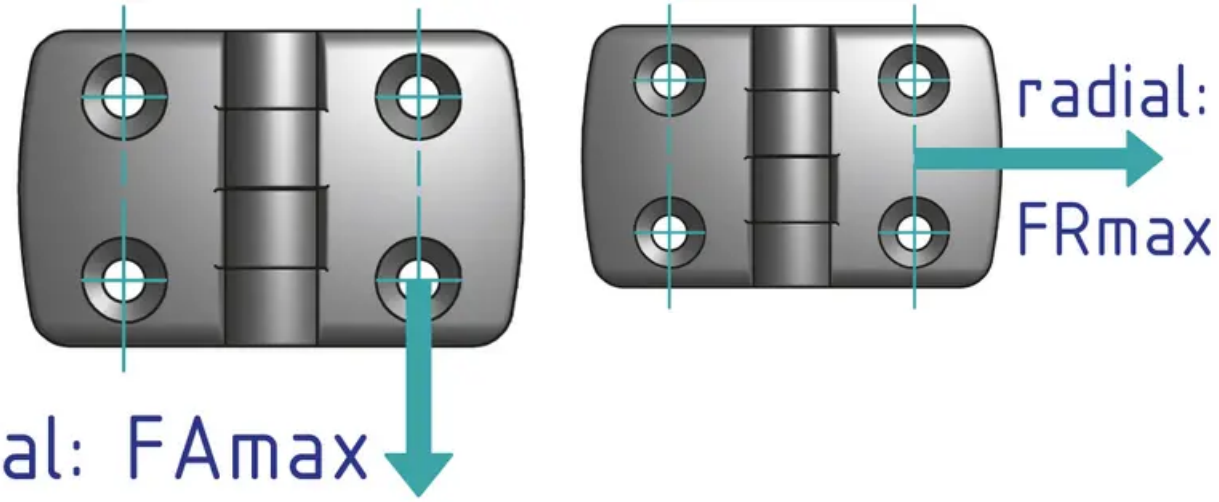

General Data

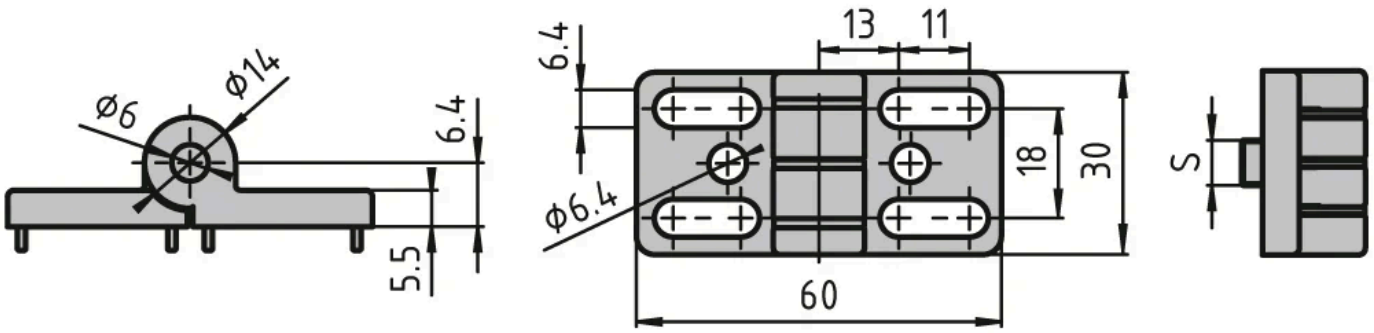

Designation	Description	System	FAmax (N)	FRmax (N)
PZ3230	Hinge 30	30 - Slot 6	250	1000
PZ5114	Hinge 30	30 - Slot 6	350	1000

Every care has been taken to ensure the accuracy of the information in this document, but we take no liability for any errors or omissions. We reserve the right to make changes without prior notice.