Plate Gasket

Holds and seals surface elements in the slot.
(Delivered on coil – sold by metres)
Material: Plastic (TPE

System: 30 - Slot 6; 20 - Slot 5
Type: Sealing, Coverstrips & Rubbers

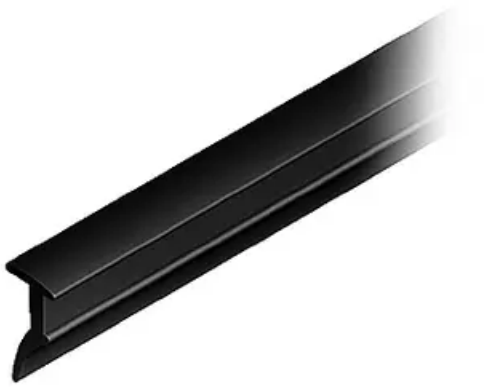

Every care has been taken to ensure the accuracy of the information in this document, but we take no liability for any errors or omissions. We reserve the right to make changes without prior notice.

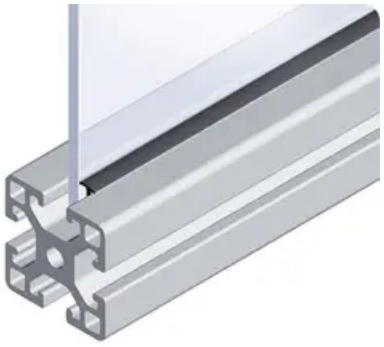

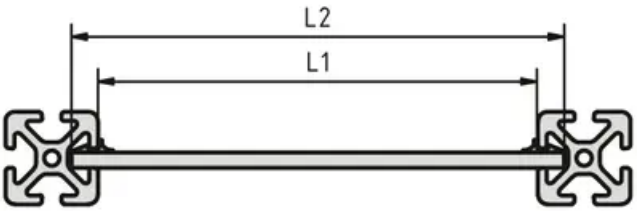

General Data

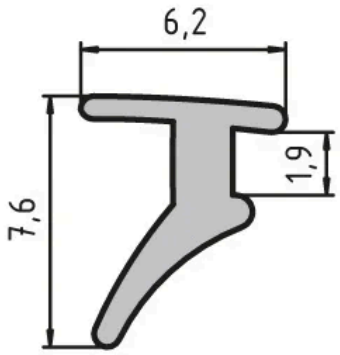

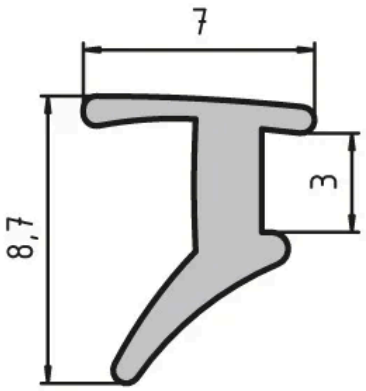

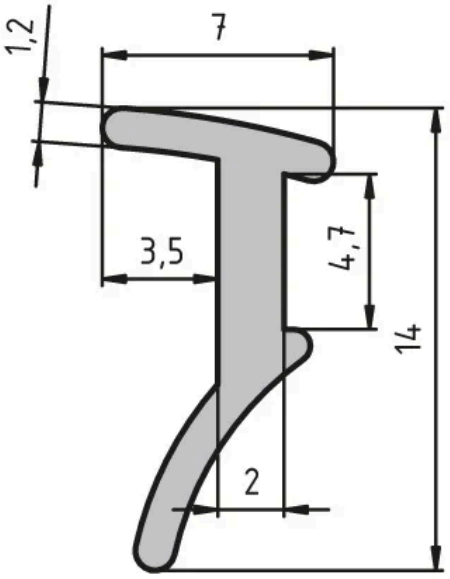

Designation	Description	System	L2	Plate Thickness
PZ4150	Sealing strip, black	20 - Slot 5	L1+10	2-3
PZ3240	Sealing strip, black	30 - Slot 6	L1+15	2-4

Every care has been taken to ensure the accuracy of the information in this document, but we take no liability for any errors or omissions. We reserve the right to make changes without prior notice.