Clamping Pad

For fastening surface elements to aluminium profiles without tools.
Material: Plastic (PA), fibreglass-reinforced
Clamping width: 1-9 mm surface elements

System: 30 - Slot 6; 20 - Slot 5
Type: Fixing Blocks/Fastening Elements

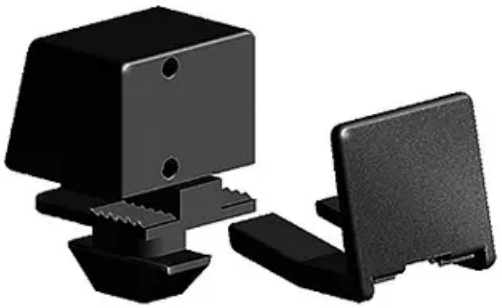

Every care has been taken to ensure the accuracy of the information in this document, but we take no liability for any errors or omissions. We reserve the right to make changes without prior notice.

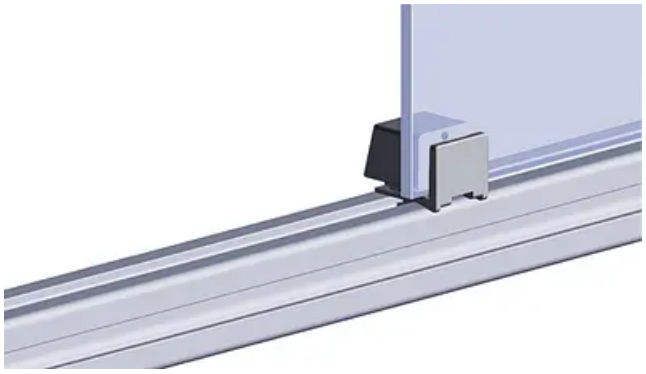

General Data

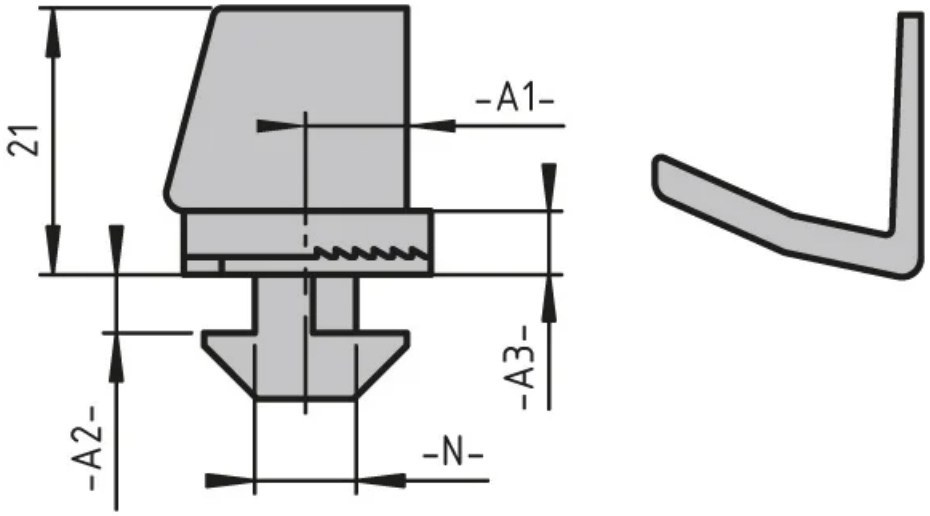

Designation	Description	System	Colour	A1	A2
PZ4115	Clamping pad	20 - Slot 5	Black	4	1.6
PZ5064	2 mm clamping pad spacer	20 - Slot 5	Black	-	-
PZ5065	3 mm clamping pad spacer	20 - Slot 5	Black	-	-
PZ5066	4 mm clamping pad spacer	20 - Slot 5	Black	-	-
PZ5067	Clamping pad	20 - Slot 5	traffic grey, similar to RAL7042	4	1.6
PZ3165	Clamping pad	30 - Slot 6	Black	7	2.7
PZ5068	Clamping pad	30 - Slot 6	traffic grey, similar to RAL7042	7	2.7

Designation	A3
PZ4115	3.6
PZ5064	-
PZ5065	-
PZ5066	-
PZ5067	3.6
PZ3165	4.5
PZ5068	4.5

Every care has been taken to ensure the accuracy of the information in this document, but we take no liability for any errors or omissions. We reserve the right to make changes without prior notice.