Panel Bracket

Fastens the surface element on the profile without further changes.
Tightening the clamping screw fastens the collet to both the surface element and the profile.
Do not use for grids or wave grids.
For 2-9 mm surface elements.
Material: Die-cast zinc, aluminium coloured powder coat
Set: 1 panel bracket, M5 × 16 screw,
5 rubber pads for 2–9 mm plates

System: 40 - Slot 8; 30 - Slot 6; 20 - Slot 5
Type: Fixing Blocks/Fastening Elements



Every care has been taken to ensure the accuracy of the information in this document, but we take no liability for any errors or omissions. We reserve the right to make changes without prior notice.

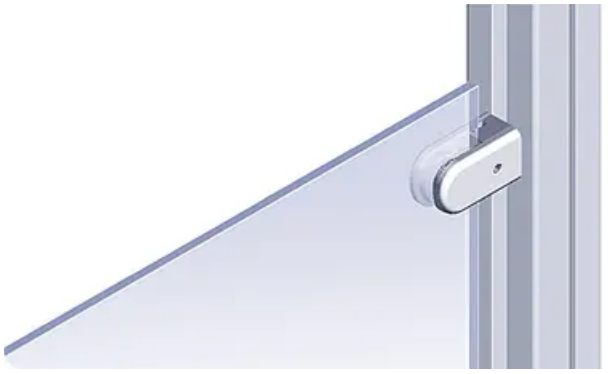

General Data

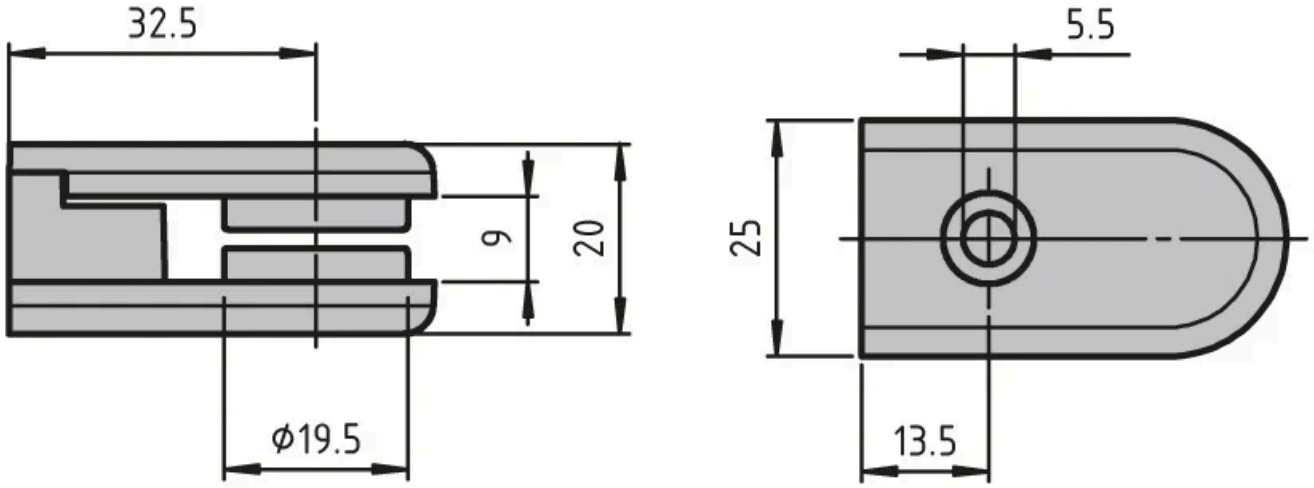

Designation	Description
RA5069	Panel bracket

Every care has been taken to ensure the accuracy of the information in this document, but we take no liability for any errors or omissions. We reserve the right to make changes without prior notice.