Bar

Easily locks doors and flaps; with spring-assisted locking pin; separate slot locking included.

Material:
Bar: Aluminium coloured die-cast zinc
Handle: Plastic (PA)

System: 30 - Slot 6; 20 - Slot 5
Type: Door Latches & Interlocks

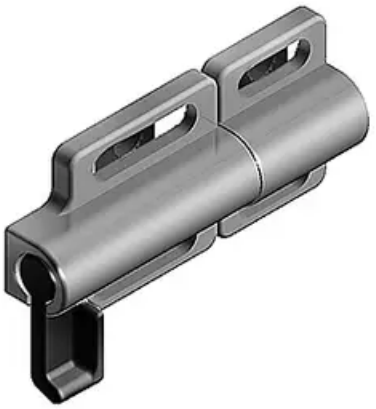

Every care has been taken to ensure the accuracy of the information in this document, but we take no liability for any errors or omissions. We reserve the right to make changes without prior notice.



General Data

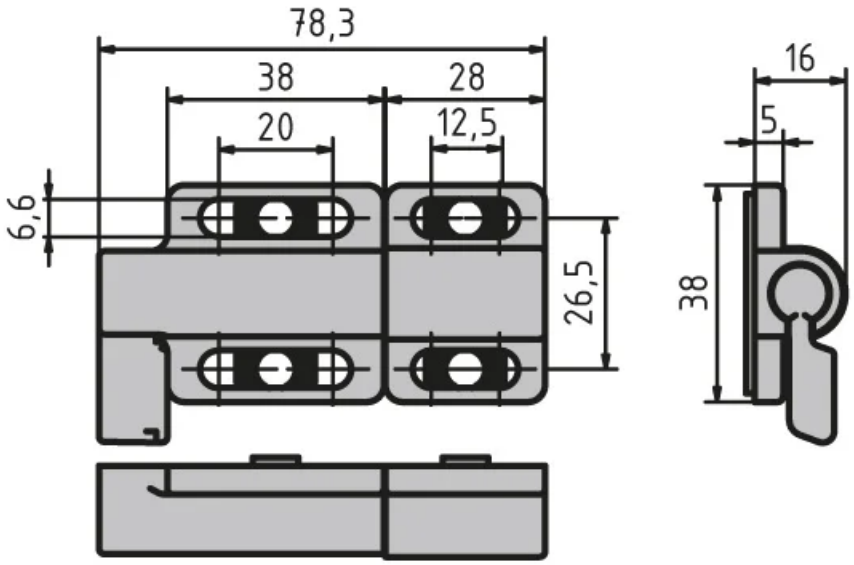

Designation	Description
PZ9024	Bar 66 × 38 mm

Every care has been taken to ensure the accuracy of the information in this document, but we take no liability for any errors or omissions. We reserve the right to make changes without prior notice.