Ball Catch

Quick acting door opener; adapts to the surface element thickness.
Mount: By M6 screw
Material: Black plastic (PA)

System: 30 - Slot 6; 40 - Slot 8
Type: Door Latches & Interlocks



Every care has been taken to ensure the accuracy of the information in this document, but we take no liability for any errors or omissions. We reserve the right to make changes without prior notice.

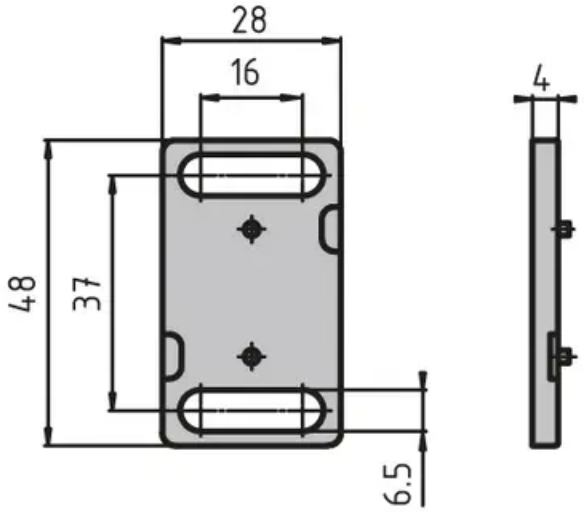





General Data

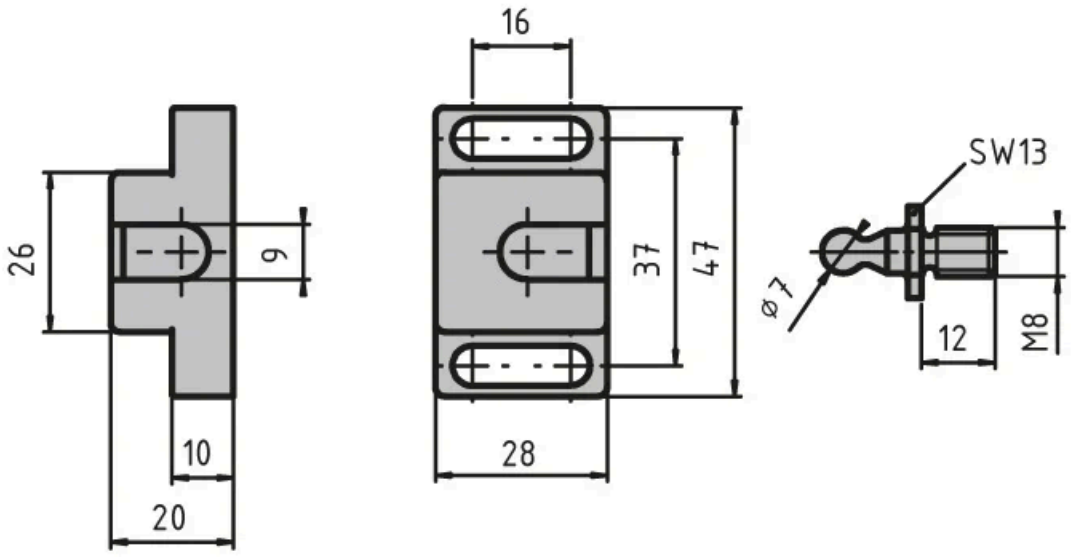

Designation	Description	Retaining screw	Locking force (N)
RA5051	Light-duty ball catch	M8 × 12, Galvanised steel	~ 40
RA5052	Light-duty ball catch	M8 × 12, Stainless steel	~ 40
RA5053	Heavy-duty ball catch	M8 × 12, Stainless steel	~ 50

Every care has been taken to ensure the accuracy of the information in this document, but we take no liability for any errors or omissions. We reserve the right to make changes without prior notice.

Designation	Description	Retaining screw	Locking force (N)
RA5054	Heavy-duty ball catch	M8 × 12, Galvanised steel	~ 50
RA5055	Ball catch spacer	-	-

Every care has been taken to ensure the accuracy of the information in this document, but we take no liability for any errors or omissions. We reserve the right to make changes without prior notice.