Clamping Spring 8

To fix panels 2 - 9 mm in the profile slot

Material: Stainless steel SS303
System: 40 - Slot 8
Type: Sealing, Coverstrips & Rubbers



Every care has been taken to ensure the accuracy of the information in this document, but we take no liability for any errors or omissions. We reserve the right to make changes without prior notice.

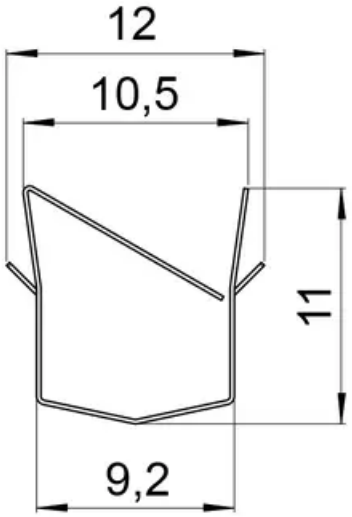

General Data

Designation	Description	System	Weight (g)	Length
RF1050	Clamping Spring 8	40 - Slot 8	4	80

Every care has been taken to ensure the accuracy of the information in this document, but we take no liability for any errors or omissions. We reserve the right to make changes without prior notice.