T-Nuts, ball-type, push-in, flat

Application:
T-nut for swiveling into the t-slot. Fits into the t-slot at any point. Held in position by a spring-loaded ball.

Material: Steel, zinc-plated
System: 40 - Slot 8
Type: T-nuts

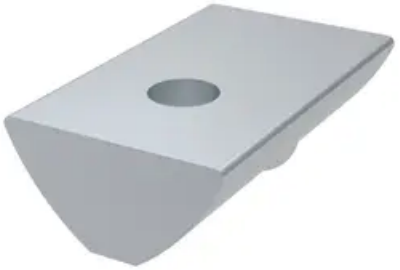

Every care has been taken to ensure the accuracy of the information in this document, but we take no liability for any errors or omissions. We reserve the right to make changes without prior notice.

T-Nuts, slide-in



T-Nuts, push-in



T-Slot Strength

Information in regards to the maximum allowable t-slot load capability F. These values already include a safety factor (S > 2) against plastic deformation.

Profile type	Max. pull charge F
standard	5000 N
semi	2500 N
light	2000 N
superlight	1750 N



General Data

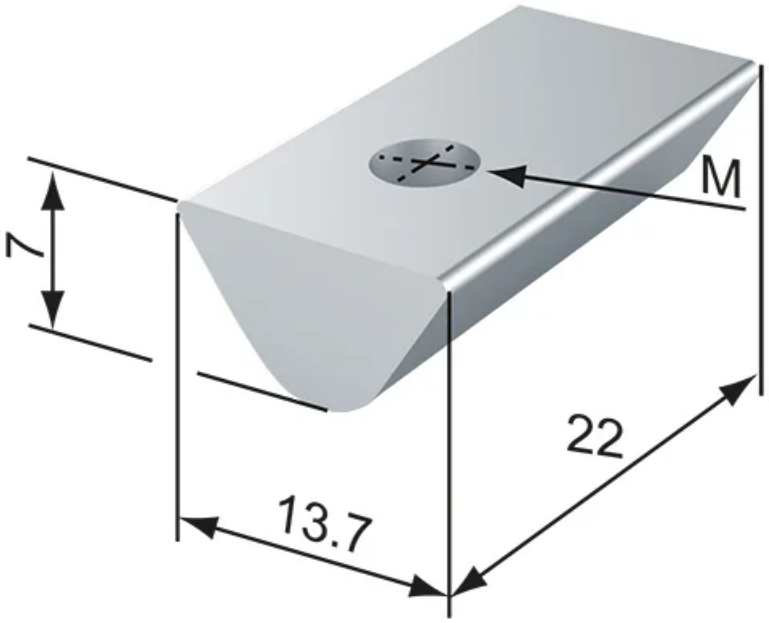

Designation	System	Thread	Weight (g)
RN1030	40 - Slot 8	M4	11
RN1035	40 - Slot 8	M5	11
RN1040	40 - Slot 8	M6	10
RN1045	40 - Slot 8	M8	9

Every care has been taken to ensure the accuracy of the information in this document, but we take no liability for any errors or omissions. We reserve the right to make changes without prior notice.