T-Nuts, ball-type, slide-in

Application:
Slides in the t-slot from the end of the profile and is held in position by a spring-loaded ball. The wide supporting surface of the t-nut makes it suitable for higher fastening forces.

Material: Steel, zinc-plated
System: 40 - Slot 8
Type: T-nuts



Every care has been taken to ensure the accuracy of the information in this document, but we take no liability for any errors or omissions. We reserve the right to make changes without prior notice.

T-Nuts, slide-in



T-Nuts, push-in



T-Slot Strength

Information in regards to the maximum allowable t-slot load capability F. These values already include a safety factor (S > 2) against plastic deformation.

Profile type	Max. pull charge F
standard	5000 N
semi	2500 N
light	2000 N
superlight	1750 N



General Data

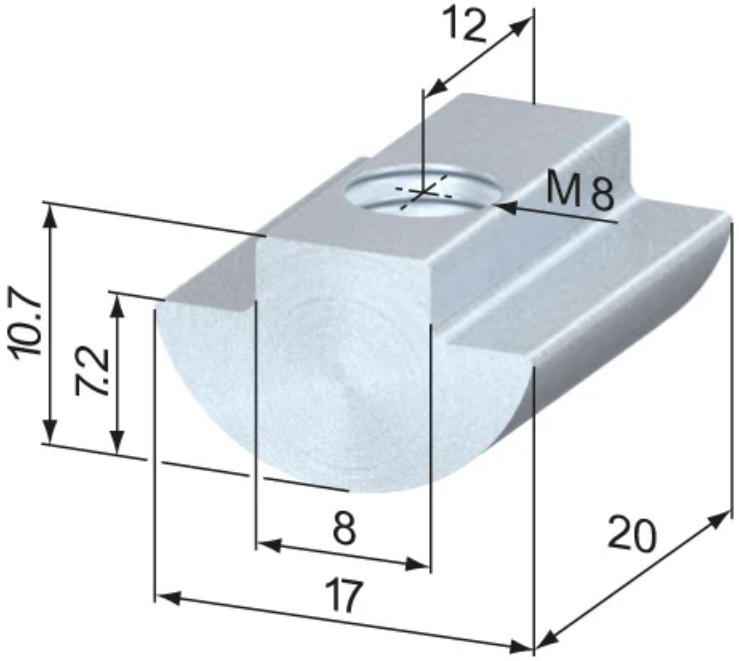

Designation	System	Thread	Weight (g)
RN1075	40 - Slot 8	M5	17
RN1080	40 - Slot 8	M6	17
RN1085	40 - Slot 8	M8	15

Every care has been taken to ensure the accuracy of the information in this document, but we take no liability for any errors or omissions. We reserve the right to make changes without prior notice.