T-Nuts, push-in

Application:
T-nut for swiveling into the t-slot. Fits into the t-slot at any point. Held in position by a grub screw. Raised area fits into the t-slot to stop twisting.

Material: Steel, zinc-plated
System: 40 - Slot 8
Type: T-nuts



Every care has been taken to ensure the accuracy of the information in this document, but we take no liability for any errors or omissions. We reserve the right to make changes without prior notice.

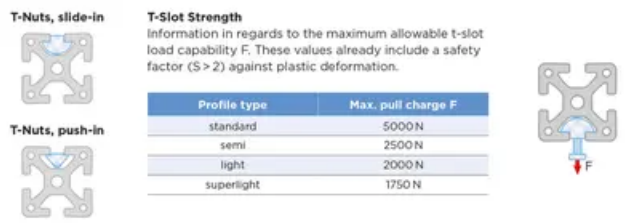

General Data

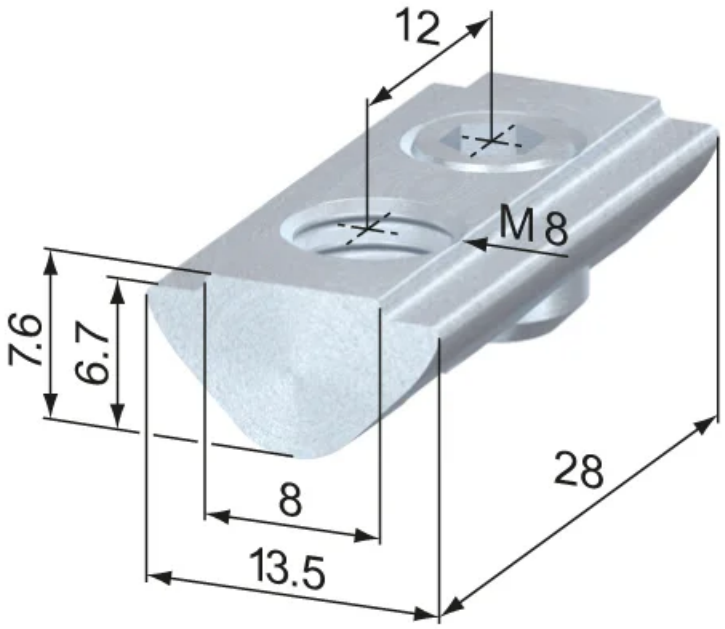

Designation	System	Thread	Weight (g)
RN1160	40 - Slot 8	M5	14
RN1161	40 - Slot 8	M6	14
RN1162	40 - Slot 8	M8	12

Every care has been taken to ensure the accuracy of the information in this document, but we take no liability for any errors or omissions. We reserve the right to make changes without prior notice.