T-Nut Profile, push-in

Application:
For manufacturing t-nuts, maximum tapping size M8.

System: 40 - Slot 8
Type: T-nuts



Every care has been taken to ensure the accuracy of the information in this document, but we take no liability for any errors or omissions. We reserve the right to make changes without prior notice.

T-Nuts, slide-in



T-Nuts, push-in



T-Slot Strength

Information in regards to the maximum allowable t-slot load capability F. These values already include a safety factor (S > 2) against plastic deformation.

Profile type	Max. pull charge F
standard	5000 N
semi	2500 N
light	2000 N
superlight	1750 N



General Data

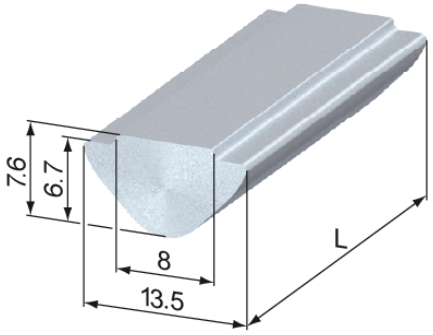

Designation	System	Material	Weight (g)	Length
RN1135	40 - Slot 8	Steel, zinc-plated	1605	1500

Every care has been taken to ensure the accuracy of the information in this document, but we take no liability for any errors or omissions. We reserve the right to make changes without prior notice.