Cross Cable Binder Block

To secure cables to aluminum profiles in two directions.
Can be mounted into the slot by a quarter turn.

Material: Plastic PA
System: 40 - Slot 8
Type: System Gliders and Rollers



Every care has been taken to ensure the accuracy of the information in this document, but we take no liability for any errors or omissions. We reserve the right to make changes without prior notice.

General Data

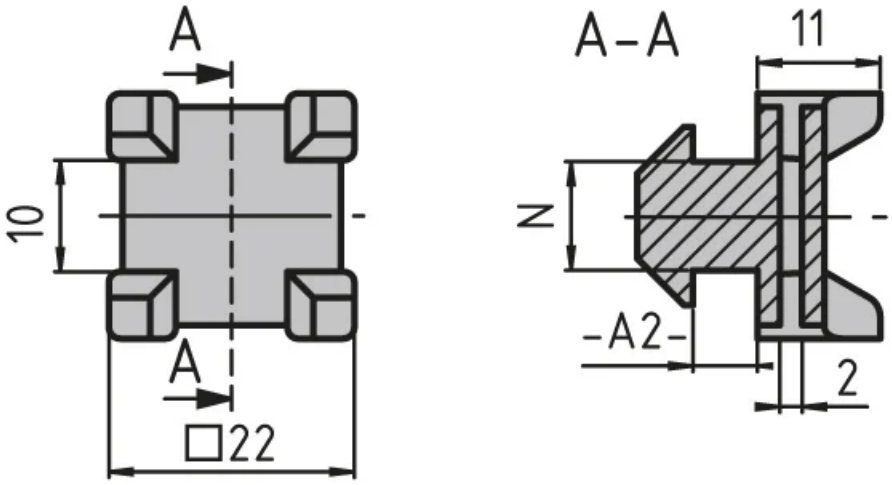

Designation	Description	System
RA1210	Strips Holder Variable 8	40 - Slot 8

Every care has been taken to ensure the accuracy of the information in this document, but we take no liability for any errors or omissions. We reserve the right to make changes without prior notice.