T-Nuts, mini

Application:
T-nut for swiveling into the t-slot. Fits into the t-slot at any point. Held in position by a spring-loaded ball. Raised area fits into groove to stop twisting.

Material: Steel, zinc-plated
System: 20 - Slot 5
Type: T-nuts

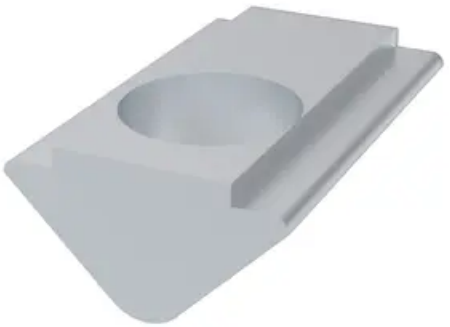

Every care has been taken to ensure the accuracy of the information in this document, but we take no liability for any errors or omissions. We reserve the right to make changes without prior notice.

General Data

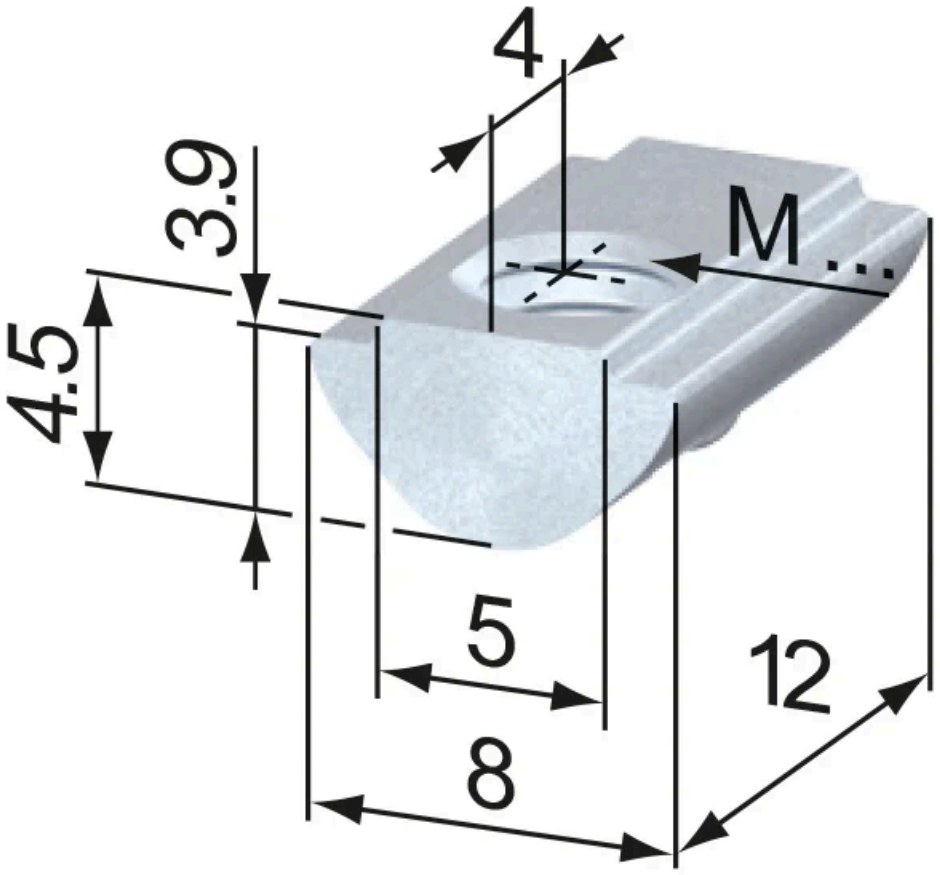

Designation	Description	System	Thread	Weight (g)
SV2192V	T-Nuts, mini M4 ball type	20 - Slot 5	M4	2
SV2193V	T-Nuts, mini M5 ball type	20 - Slot 5	M5	2

Every care has been taken to ensure the accuracy of the information in this document, but we take no liability for any errors or omissions. We reserve the right to make changes without prior notice.