Adjustable Feet Kit, Base 40 and 80 with anti-slip/vibration plate

Swiveling feet for levelling out uneven floors. Pivoting range of ball-and-socket joint: ± 20.
No mounting holes.
Ball joint Ø15.
Delivered as a kit, not assembled.



Material:
• Base: Plastic PA (black), glass ball reinforced or die-cast zinc black powder coated.
• Threaded rod: Steel,surface zinc plated.
• Anti-slip plate: Thermoplastic elastomer ≈ 70 shore A. Oil and water resistant (up to 60 °C).

For stainless – steel please contact Rollco.

System: 40 - Slot 8; 30 - Slot 6; 20 - Slot 5
Type: Feet

Every care has been taken to ensure the accuracy of the information in this document, but we take no liability for any errors or omissions. We reserve the right to make changes without prior notice.

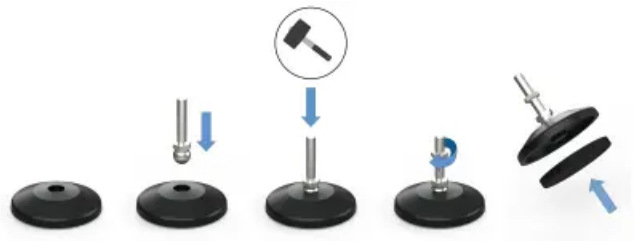

Every care has been taken to ensure the accuracy of the information in this document, but we take no liability for any errors or omissions. We reserve the right to make changes without prior notice.

General Data

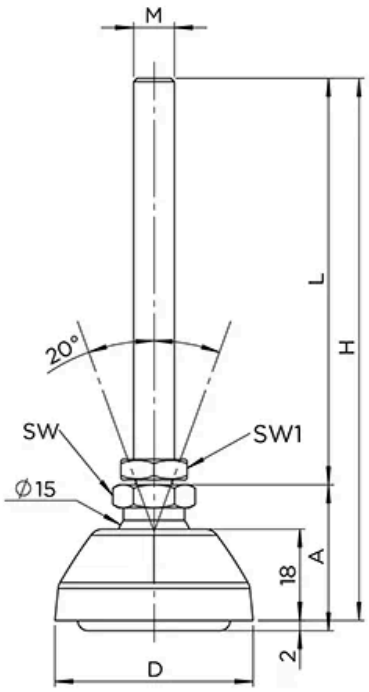

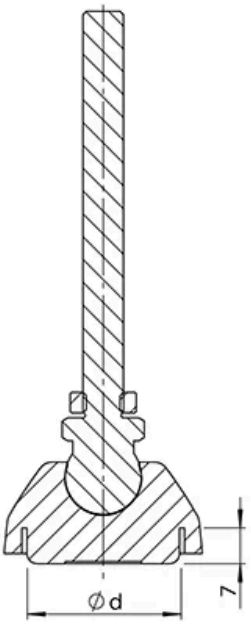

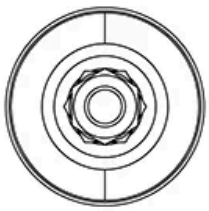

Adjustable Feet, Base 40 with anti-slip/vibration plate
Plastic PA, Black

Designations:
RA7006
RA7013
RA7020
RA7027
RA7034
RA7041
RA7048

Every care has been taken to ensure the accuracy of the information in this document, but we take no liability for any errors or omissions. We reserve the right to make changes without prior notice.

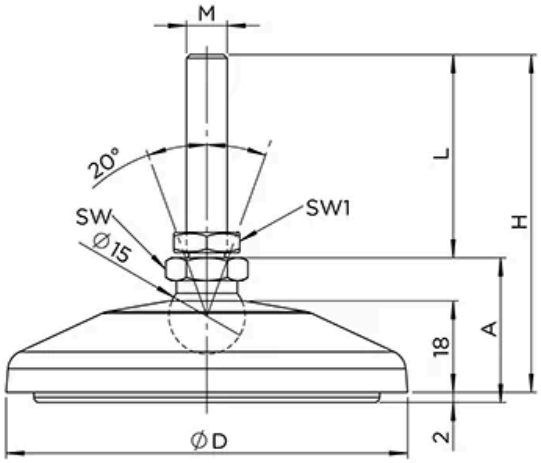

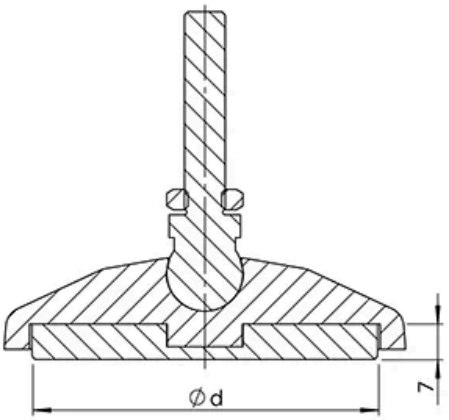

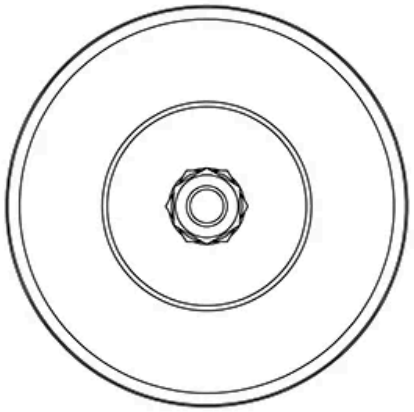

Adjustable Feet, Base 80 with anti-slip/vibration plate
Plastic PA, Black

Designations:
RA7000
RA7007
RA7014
RA7021
RA7028
RA7035
RA7042

Every care has been taken to ensure the accuracy of the information in this document, but we take no liability for any errors or omissions. We reserve the right to make changes without prior notice.

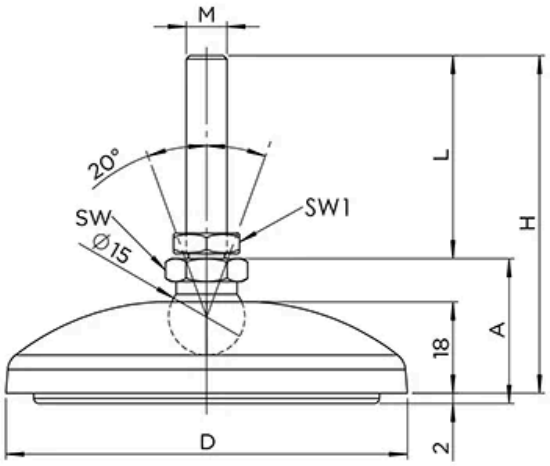

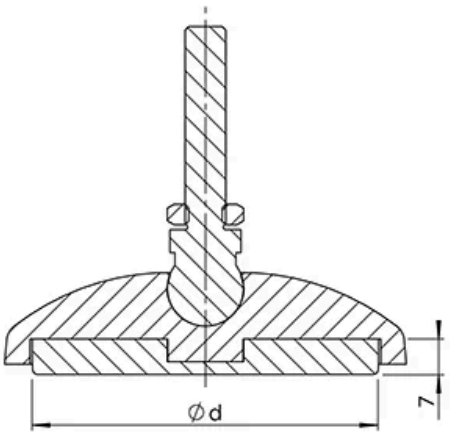

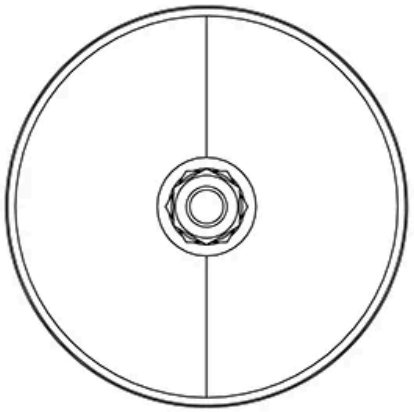

Adjustable Feet, Base 80 with anti-slip/vibration plate
Die-cast zinc with a black powder coat

Designations:
RA7001
RA7008
RA7015
RA7022
RA7029
RA7036
RA7043

Designation	A	D	H	L	M
RA7006	29.5	39	68.5	40	M8
RA7013	29.5	39	108.7	80	M8
RA7020	29.5	39	73.7	45	M10
RA7027	29.5	39	73.7	45	M12
RA7034	29.5	39	153.7	125	M12
RA7041	29.5	39	94.7	66	M16
RA7048	29.5	39	153.7	125	M16
RA7000	29.5	79	68.5	40	M8
RA7007	29.5	79	108.7	80	M8
RA7014	29.5	79	73.7	45	M10
RA7021	29.5	79	73.7	45	M12
RA7028	29.5	79	153.7	125	M12
RA7035	29.5	79	94.7	66	M16
RA7042	29.5	79	153.7	125	M16
RA7001	29.5	79	68.5	40	M8
RA7008	29.5	79	108.7	80	M8
RA7015	29.5	79	73.7	45	M10
RA7022	29.5	79	73.7	45	M12

Every care has been taken to ensure the accuracy of the information in this document, but we take no liability for any errors or omissions. We reserve the right to make changes without prior notice.

Designation	A	D	H	L	M
RA7029	29.5	79	153.7	125	M12
RA7036	29.5	79	94.7	66	M16
RA7043	29.5	79	153.7	125	M16

Designation	Base	d	Weight (g)	Max. Load (kg)	SW (mm)
RA7006	Plastic PA, Black	30	56	350	14
RA7013	Plastic PA, Black	30	69	350	14
RA7020	Plastic PA, Black	30	65	470	14
RA7027	Plastic PA, Black	30	75	770	14
RA7034	Plastic PA, Black	30	134	770	14
RA7041	Plastic PA, Black	30	132	900	17
RA7048	Plastic PA, Black	30	210	900	17
RA7000	Plastic PA, Black	68	106	350	14
RA7007	Plastic PA, Black	68	119	350	14
RA7014	Plastic PA, Black	68	115	470	14
RA7021	Plastic PA, Black	68	125	770	14
RA7028	Plastic PA, Black	68	184	770	14
RA7035	Plastic PA, Black	68	182	900	17
RA7042	Plastic PA, Black	68	260	900	17
RA7001	Die-cast zinc with a black powder coat	68	322	350	14
RA7008	Die-cast zinc with a black powder coat	68	335	350	14
RA7015	Die-cast zinc with a black powder coat	68	331	470	14
RA7022	Die-cast zinc with a black powder coat	68	341	770	14
RA7029	Die-cast zinc with a black powder coat	68	398	770	14
RA7036	Die-cast zinc with a black powder coat	68	398	1450	17
RA7043	Die-cast zinc with a black powder coat	68	476	1450	17

Every care has been taken to ensure the accuracy of the information in this document, but we take no liability for any errors or omissions. We reserve the right to make changes without prior notice.